SunCoastParts.com
Porsche Parts & Accessories

PORSCHE

My Account View Cart Checkout Contact

Parts & Accessories Merchandise Top Pages Dealer Sites 877-923-1700 **$0.00** 0 items

Search by keywords...

Invoice

Order #358403 **Date:** 06/03/2019 12:54:47 EDT

Thank you for your order. Please keep this invoice for your records.

Bill To: Ship To:

Residential Address

Item	Qty.	Item Price	Total Price
Plate Frame - Black - LPFBLACK	1	$39.95	$39.95
PNA: 200500			
License Plate Screws - PKSCREWS	1	$6.95	$6.95
Featured Lloyd Ultimat - 997/987 - Special! - 9X7LLOYD	1	$99.95	$99.95
Version: PK9X7LLOYD__			
Carpet Front Trunk Mat - 911 Carrera - LLOYD911R	1	$99.95	$99.95
Year: 2006			
Model: CarreraS			
Logo: PORSCHE			

LogoColor: Red			
Umbrella - Mini Door Sill - PK2012UMBRELLA	1	$79.95	$79.95
Porsche Sunshade - POSUSH2	1	$69.95	$69.95
VERSION: PKSHADE997			
(Special Offer) 70 Years Of Porsche T-Shirt - SKU70SHIRT	1	$26.36	$26.36
SeeSKU: 00S0KUSA			
		Shipping: FREE SHIPPING!! (:	*$0.00*
		Sales Tax:	*$0.00*
		Total:	**$423.06**
		Payment: Amazon Pay:	($423.06)

Driver's Selection Tequipment Porsche Classic

Tools

My Account / Logout
Order History
Search Wishlists
FAQ's

Customer Support

Contact Us
Local PickUp
Shipping
Returns
Warranty
Site Map

Company Information

Authorized Porsche Dealer
About Us
Privacy & Cookie Policy
Terms & Conditions

Follow Us

Your e-mail address

© Copyright 2018 Suncoast Parts and Accessories. All Rights Reserved.

S·U·N·C·O·A·S·T MOTORSPORTS

PORSCHE OF SARASOTA • SUNSET VOLKSWAGEN

5005 SOUTH TAMIAMI TRAIL • SARASOTA, FLORIDA 34231

Order 358403

CUST NO.	TAX EXEMPT NUMBER	CUST. P. O. NO.	SHIP VIA	PAY	SOLD BY	INVOICE DATE	INVOICE NO.
34907	OUT OF STATE	4155722826		INTERNET	ALDO TRIFKA	06/04/19	370970 POG

BILL

SHIP QTY	B. O. QTY	PART NUMBER / DESCRIPTION	BIN	LIST	NET	AMOUNT
1	0	PNA-702-005-00 B	4600	67.20	39.95	39.95
1	0	PKSCREWS BLK SCREWS	4104	7.50	6.95	6.95
1	0	PK9X7LLOYD 997-987 LLOYD R	8501	147.80	99.95	99.95
1	0	PK2012UMBRELLA UMBRELLA		79.95	79.95	79.95
1	0	WAP-050-081-0D UMBRELLA S	6300	133.32	****	****
1	0	PKSHADE997 SUN SHADE		69.95	69.95	69.95
1	0	PNA-505-997 997 S	8516	117.16	****	****
1	0	PNA-711-00S-0K-USA 70YR GREY TSHIRT	6190	38.84	26.36	26.36
1	0	LLOYD FLOOR MAT	MATRAK	136.29	99.95	99.95

TELEPHONE: (941) 923-1700

www.sunsetautogroup.com

-D/S

SEE REVERSE SIDE FOR RETURN POLICY

"AS IS" The only warranties applying to this Part(s) are those which may be offered by the manufacturer. The selling dealer hereby expressly disclaims all warranties, either express or implied, including any implied warranties of merchantability or fitness for a particular purpose, and neither assumes nor authorizes any other person to assume for it any liability in connection with the sale of this part(s) and/or service. Buyer shall not be entitled to recover from the selling dealer any consequential damages, damages to property, damages for loss of use, loss of time, loss of profits, or income, or any other incidental damages.

The Purchaser hereby acknowledges that Seller has made available "Warranty Pre-Sale Information" as disclosed in the Warranty Binders pursuant to the Magnuson-Moss Warranty Act.

REC'D BY _____

NO REFUNDS WITHOUT THIS INVOICE

SUBTOTAL	423.06
TAX	0.00
FREIGHT	0.00
PAY THIS AMOUNT	423.06

ALL RETURNS MUST BE ACCOMPANIED WITH ORIGINAL INVOICE BEFORE 20 DAYS.

SPECIAL ORDERS & ELECTRICAL PARTS ARE NON-RETURNABLE.

NO REFUND WITHOUT THIS INVOICE.

35% RESTOCKING CHARGE ON ALL RETURNS UNLESS OTHER ARRANGEMENTS ARE MADE AT TIME OF PURCHASE.

CUSTOMER COPY

0601C370970

08:37:31 PAGE 1 OF 1
NET596

PARTS INVOICE

Invoice

Date:	06/07/2019
Invoice #:	828
Order #:	
BAR #:	00239756
EPA #:	CAL000429229

Pacific Power Motorsports
1413 Carlback Avenue

Walnut Creek, CA 94596

Phone 9259372277
Email eleman@pacificpowermotorsports.com
Web www.pacificpowermotorsports.com
F.E.I.N. 26-2206454

License Plate	6S740377
Make/Model	2006 Porsche 997 S
Odometer	13731
Color / Couler	Black
VIN	WP0AB29976S740377
Next Srvc	12/07/2019
Prod. Date	07/2005

Item	Description	Quantity	Unit Price	Tax	Total
LABOR					
LABOR, 1 SHOP	Perform Vehicle Maintenance Inspection.	2.00	$160.00	$0.00	$320.00
LABOR, OIL SERVICE	Porsche 997 S Engine Oil Service. Replace Engine oil and engine oil filter with new oil and filter.	1.40	$160.00	$0.00	$224.00
LABOR, 1 SHOP	Remove drivers Side Door Inner Panel And Inspect Door Handle Pivot And Cable.	1.00	$160.00	$0.00	$160.00
LABOR, 1 SHOP	Replace Drivers Side Inner Door Handle Hinge And Install Updated Cable.	1.50	$160.00	$0.00	$240.00
				Labor Total	**$944.00**
PARTS					
FLUIDS, OIL (ENGINE)	Motul 8100 Xcess 5w-40 Synthetic Engine Oil, quart	11.00	$9.99	$9.07	$118.96
BODY MECH, OIL	Porsche 997 S Engine Oil Filter Kit, New	1.00	$24.70	$2.04	$26.74
HAZ FEE, OIL (ENGINE)	Hazardous Material Disposal Fee, Engine Oil	1.00	$5.20	$0.00	$5.20
BODY MECH, DOOR	Porsche 997 S Drivers Side Inner Release Handle Hinge, New	1.00	$25.53	$2.11	$27.64
BODY MECH, DOOR	Porsche 997 S Interior Door Handle Cable, New	1.00	$14.23	$1.17	$15.40
				Parts Total	**$193.94**

Subtotal	$1123.55
Sales Tax	$14.39
Total	**$1137.94**
Payment Terms: **Balance Due**	**$0.00**
Paid Credit Card	**$1137.94**

Bosch Digital Motor Electronics Motronic 7.8.1

Information

Number of ignitions range 1	1416 / 608.9h
Number of ignitions range 2	304 / 608.9h
Number of ignitions range 3	56 / 508.8h
Number of ignitions range 4	0 / 0h
Number of ignitions range 5	0 / 0h
Number of ignitions range 6	0 / 0h
Operating hours counter	682.2
Vehicle Identification Number	WP0AB29976S740377
Data version	00419100A8223A33
Variant	2505
Type ID DME control unit	9978US01
Order type	997120
Country code	C2
Transmission type	68600946
Transmission number	G9701
Interior equipment	AN

Motor Over-speed Ignition Ranges

MODEL	RANGE 1	RANGE 2	RANGE 3	RANGE 4	RANGE 5	RANGE 6
986 Boxster	>7200 and <7800	>7800				
996 Carrera	>7300 and <7900	>7900				
996 Turbo & GT2	>6750 and <7250	>7250				
996 GT3	>8200 and <8800	>8800				
Cayenne V6	>6700 and <6900	>6900				
Cayenne S (V8S)	>6900 and <7200	>7200				
Cayenne Turbo (V8T)	>6670 and <7000	>7000				
Carrera GT	>8400 and <9000	>9000				
987 Boxster	>7200 and <7500	>7500 and <7700	>7700 and <7900	>7900 and <8400	>8400 and <9500	>9500
997 Carrera	>7300 and <7500	>7500 and <7700	>7700 and <7900	>7900 and <8400	>8400 and <9500	>9500
997 GT3	>9000 and <9200	>9200 and <9400	>9400 and <9600	>9600 and <10000	>10000 and <11000	>11000
997 Turbo	>6800 and <7000	>7000 and <7200	>7200 and <7400	>7400 and <7900	>7900 and <9000	>9000

Short Test

Siemens Digital Motor Electronics SDI3

No Faults Found

PDK Gear Selector - PDK GS

No Faults Found

Porsche Stability Management - PSM

No Faults Found

All Wheel Drive - PTM

No Faults Found

Porsche Active Suspension Management - PASM

No Faults Found

Tire Pressure Monitor - TPM

No Faults Found

Instrument cluster - 9x7

No Faults Found

Vehicle Electrical System

No Faults Found

Airbag - POSIP

No Faults Found

Advanced Weight System - AWS

No Faults Found

Steering Column Electronics

No Faults Found

Air Conditioning

No Faults Found

Cornering Lights

No Faults Found

Gateway

No Faults Found

Porsche Access System - PAS

No Faults Found

Front Body Module

No Faults Found

Rear Body Module

No Faults Found

Left Door Module

No Faults Found

Right Door Module

No Faults Found

Convertible Top

Targa Roof

Park Assist

No Faults Found

Seat Memory

No Faults Found

Sports Chronometer

No Faults Found

Short Test

Bosch Digital Motor Electronics Motronic 7.8.1

No Faults Found

Porsche Stability Management - PSM

No Faults Found

All Wheel Drive - PTM

Porsche Active Suspension Management - PASM

No Faults Found

Tire Pressure Monitor - TPM

Instrument cluster - 9x7

No Faults Found

Vehicle Electrical System

No Faults Found

Airbag - POSIP

Current Fault Codes

C152:
Communication PSM control unit (drive)

Advanced Weight System - AWS

No Faults Found

Steering Column Electronics

No Faults Found

Air Conditioning

Current Fault Codes

Cornering Lights

Gateway

No Faults Found

Porsche Access System - PAS

Current Fault Codes

8004:
Terminal 50

Front Body Module

No Faults Found

Rear Body Module

No Faults Found

Left Door Module

Current Fault Codes

8009:
Door h. button, inner sh. stroke

Right Door Module

No Faults Found

Convertible Top

Targa Roof

Park Assist

Seat Memory

Current Fault Codes

C102:
CAN single-wire operation "comfort"

Sports Chronometer

No Faults Found

CARS Dawydiak, Inc.
1540 Pine St., S.F. CA 94109-4612
lani@carsauto.com
P:415.940.0185, F:415.840.0348
94-3065583

Final Invoice

RO #:7432
Unit #:
Arrived: 6/12/2019
Ready: 7/29/2019

CLIENT COPY

Estimator: WALTER DAWYDIAK

Customer Information		Vehicle Information		Insurance Information	
Name:		Vehicle:	2006 BLACK PORSCHE 911 CAR	Ins Co:	CUSTOMER PAY
Address:		Style:	07/2005	Contact:	
		License:	NOPLATES	Phone:	
Phone:		VIN:	WP0AB29976S740377	Claim #:	*REPAINT PANELS
		Mileage:	13764	Deduct:	$0.00
		Mileage Out:			

#	S#	Operation	Description	Type	Price	Adj Price	T	Lbr	Addl	Dept	Paint	Addl
1			C/R REPAINT FRONT BUMPER, FENDERS, HOOD&ROOF 9-10							B		
1			CUSTOMER PAY - REQUESTED ITEMIZED ESTIMA				✓			B		
2			C/R RT REAR WHEEL 250-275							B		
2			FRONT BUMPER				✓					
3		Repair	Bumper cover manual trans w/headlamp was				✓	$720.00		B		
3		Refinish	Bumper cover manual trans w/headlamp was				✓			R	$416.00	
3			C/R FULL FRONT CLEAR BRA 2800							B		
4			C/R REPLACE GAS CAP							B		
4			Add for Clear Coat				✓			R	$160.00	
5			C/R QUOTE REPLACE W/S SEAL							B		
5			FRONT LAMPS				✓					
6			C/R QUOTE REPLACE KEY FOB							B		
6		Remove/Install	RT Headlamp washer				✓	$48.00		B		
7		Remove/Install	LT Headlamp washer				✓	$48.00		B		
8		Remove/Install	RT R&I headlamp assy				✓	$64.00		B		
9		Remove/Install	LT R&I headlamp assy				✓	$64.00		B		
10		Overhaul	O/H bumper assy				✓	$640.00		B		
11		Remove/Install	RT Combo lamp				✓			B		
12		Remove/Install	LT Combo lamp				✓			B		
13		Remove/Install	RT Marker lamp assy				✓			B		
14		Remove/Install	LT Marker lamp assy				✓			B		
15			HOOD				✓					
16		Refinish	Hood				✓			R	$480.00	
16		Repair	Hood				✓	$544.00		B		
17			Add for Clear Coat				✓			R	$192.00	
18		Remove/Install	Emblem				✓	$32.00		B		

CARS Dawydiak, Inc.
1540 Pine St., S.F. CA 94109-4612
lani@carsauto.com
P:415.940.0185, F:415.840.0348
94-3065583

Final Invoice

RO #:7432
Unit #:

Arrived: 6/12/2019
Ready: 7/29/2019

Estimator: WALTER DAWYDIAK

Customer Information	Vehicle Information	Insurance Information
Name:	Vehicle: 2006 BLACK PORSCHE 911 CAR	Ins Co: CUSTOMER PAY
Address:	Style: 07/2005	Contact:
	License: NOPLATES	Phone:
Phone:	VIN: WP0AB29976S740377	Claim #: *REPAINT PANELS
	Mileage: 13764	Deduct: $0.00
	Mileage Out:	

19		FENDER			✓			
20	Repair	RT Fender w/o antenna			✓	$480.00	B	
20	Refinish	RT Fender w/o antenna			✓		R	$352.00
21		Overlap Major Adj. Panel			✓		R	($64.00)
22		Add for Clear Coat			✓		R	$64.00
23	Refinish	LT Fender w/o antenna			✓		R	$352.00
23	Repair	LT Fender w/o antenna			✓	$480.00	B	
24		Overlap Major Adj. Panel			✓		R	($64.00)
25		Add for Clear Coat			✓		R	$64.00
26	Remove/Install	RT Rear cover			✓	$32.00	B	
27	Remove/Install	LT Rear cover			✓	$32.00	B	
28		WINDSHIELD			✓			
29	Remove/Replace	Windshield Porsche, coupe & targa w/shad	NW	$854.95	✓	$560.00	B	
30	Remove/Replace	Adhesive kit	NW	$165.92	✓		B	
31	Remove/Install	RT Wiper arm			✓		B	
32	Remove/Install	LT Wiper arm			✓		B	
33	Remove/Install	Mirror inside w/auto dim			✓		B	
34		COWL			✓			
35	Remove/Install	Cowl grille			✓	$64.00	B	
36		ROOF			✓			
37	Repair	Roof panel w/sunroof w/o antenna			✓	$400.00	B	
37	Refinish	Roof panel w/sunroof w/o antenna			✓		R	$416.00
38		Overlap Major Adj. Panel			✓		R	($64.00)
39		Add for Clear Coat			✓		R	$64.00
40	Remove/Install	RT Strip			✓	$48.00	B	
41	Remove/Install	LT Strip			✓	$48.00	B	
42	Refinish	RT Strip			✓		R	$128.00
43	Remove/Install	Sunroof panel			✓	$144.00	B	
44	Refinish	LT Strip			✓		R	$128.00
45	Repair	Sunroof panel			✓	$400.00	B	
45	Refinish	Sunroof panel			✓		R	$240.00

CARS Dawydiak, Inc.
1540 Pine St., S.F. CA 94109-4612
lani@carsauto.com
P:415.940.0185, F:415.840.0348
94-3065583

Final Invoice

RO #:7432
Unit #:
Arrived: 6/12/2019
Ready: 7/29/2019

Estimator: WALTER DAWYDIAK

Customer Information		Vehicle Information		Insurance Information	
Name:		Vehicle:	2006 BLACK PORSCHE 911 CAR	Ins Co:	CUSTOMER PAY
Address:		Style:	07/2005	Contact:	
		License:	NOPLATES	Phone:	
Phone:		VIN:	WP0AB29976S740377	Claim #:	*REPAINT PANELS
		Mileage:	13764	Deduct:	$0.00
		Mileage Out:			

46		Overlap Major Adj. Panel			✓		R	($64.00)
47		Add for Clear Coat			✓		R	$32.00
48	Remove/Replace	Sunroof panel gasket	NW	$96.72	✓		B	
49		PILLARS, ROCKER & FLOOR			✓			
50	Remove/Install	RT Rocker molding w/o GTS black			✓	$128.00	B	
51	Remove/Install	LT Rocker molding w/o GTS black			✓	$128.00	B	
52		MISCELLANEOUS OPERATIONS			✓			
53		PRIMER FILL & BLOCK			✓	$560.00	B	
54	Remove/Replace	Cover car/bag x2	NW	$15.00	✓	$64.00	B	
55		Color Match			✓		R	$80.00
56		Wet/Dry Sand, Rub-Out & Buff			✓	$640.00	B	
57		E.P.C.	HW	$5.00	✓		B	
64		Paint Materials	PM	$910.00	✓			
71	Addl Labor	C/P REFURBISH WHEEL		$275.00			B	
72	Remove/Replace	C/P CLEAR SHIELD PROTECTOR, PORSCHE 911S NOSE+ MIR	SL	$2,800.00			B	
73		INTERIOR DETAIL	DL			$320.00	B	

Totals:	RO:	Supp:	Total:
Final (Combined) Totals			
Parts - New	$1,132.59		$1,132.59
PARTS TOTAL	$1,132.59		$1,132.59
Body Labor	$6,688.00		$6,688.00
Refinish Labor	$2,912.00		$2,912.00
LABOR TOTAL	$9,600.00		$9,600.00
Sublet	$2,800.00		$2,800.00

CARS Dawydiak, Inc.
1540 Pine St., S.F. CA 94109-4612
lani@carsauto.com
P:415.940.0185, F:415.840.0348
94-3065583

Final Invoice

RO #:7432
Unit #:

Arrived: 6/12/2019
Ready: 7/29/2019

Estimator: WALTER DAWYDIAK

Customer Information	Vehicle Information	Insurance Information
Name:	Vehicle: 2006 BLACK PORSCHE 911 CAR	Ins Co: CUSTOMER PAY
Address:	Style: 07/2005	Contact:
	License: NOPLATES	Phone:
Phone:	VIN: WP0AB29976S740377	Claim #: *REPAINT PANELS
	Mileage: 13764	Deduct: $0.00
	Mileage Out:	

Paint Materials	$910.00	$910.00
Hazardous Waste Removal	$5.00	$5.00
Miscellaneous	$275.00	$275.00

Sub Total	$14,722.59	$14,722.59
Sales Tax (8.500%)		$174.05
GRAND TOTAL		$14,896.64

SunCoastParts.com
Porsche Parts & Accessories

PORSCHE

My Account View Cart Checkout Contact

Parts & Accessories Merchandise Top Pages Dealer Sites 877-923-1700 **$0.00** 0 items

Search by keywords...

Invoice

Order #370655

Date: 08/06/2019 14:13:28 EDT

Thank you for your order. Please keep this invoice for your records.

Bill To:

Ship To:

Residential Address

Item	Qty.	Item Price	Total Price
Hood Protector - 911/Carrera - DASSCHILD911	1	$195.00	$195.00
Year: DAS9X7			
Front Hood Struts - 997/987 - PK997STRUT	1	$81.50	$81.50
Valve Stem Caps - VSC	1	$16.95	$16.95
style: PKVALVEC			
Factory Wiper Blade Set - 99662890108	1	$46.00	$46.00
Deviated Seat Belt Kit - Carrera 997 & 996 - CarreraBelts	1	$850.00	$850.00
VINforPET: WP0AB29976S740377			
Set: FrontOnly			

year: 2006		
color: Red		
	Shipping: UPS Ground:	*$118.46*
	Sales Tax:	*$0.00*
	Total:	**$1,307.91**
	Payment: American Express:	($1,307.91)

Driver's Selection Tequipment Porsche Classic

Tools

My Account / Logout
Order History
Search Wishlists
FAQ's

Customer Support

Contact Us
Local PickUp
Shipping
Returns
Warranty
Site Map

Company Information

Authorized Porsche Dealer
About Us
Privacy & Cookie Policy
Terms & Conditions

Follow Us

Your e-mail address

© Copyright 2018 Suncoast Parts and Accessories. All Rights Reserved.

UPS, the UPS Shield trademark, and the color brown are trademarks of United Parcel Service of America, Inc. All Rights Reserved. *NOTICE: These fees do not necessarily represent UPS published rates and may include charges levied by Suncoast Porsche Parts*

CARS Dawydiak, Inc.
1540 Pine St., S.F. CA 94109-4612
lani@carsauto.com
P:415.940.0185, F:415.840.0348
94-3065583

PAID

Final Invoice

RO #:0
Unit #:
Arrived:
Ready:

Estimator: DON MONTALVO

Customer Information		Vehicle Information		Insurance Information	
Name:		Vehicle:	2006 BLACK PORS 911 Carrera	Ins Co:	CUSTOMER PAY
Address:		Style:	2D CPE	Contact:	
		License:		Phone:	
Phone:		VIN:	WP0AB29976S740377	Claim #:	*FUEL DOOR
		Mileage:	13764	Deduct:	$0.00
		Mileage Out:			

#	S#	Operation	Description	Type	Price	Adj Price	T	Lbr	Addl	Dept	Paint	Addl
1			FRONT BUMPER				✓					
2		Remove/Install	R&I bumper cover				✓	$400.00		B		
3			FRONT LAMPS				✓					
4		Remove/Install	RT R&I headlamp assy				✓	$64.00		B		
5			FENDER				✓					
6		Remove/Replace	Fuel door	NW	$82.18		✓			B		
6		Refinish	Fuel door				✓			R	$48.00	
7			Add for Clear Coat				✓			R	$16.00	
8		Refinish	Fuel door hinge				✓			R	$48.00	
8		Remove/Replace	Fuel door hinge	NW	$17.13		✓	$48.00		B		
9			Add for Clear Coat				✓			R	$16.00	
10		Remove/Replace	Fuel door spring	NW	$5.65		✓			B		
11		Remove/Replace	Fuel door cap	NW	$2.45		✓			B		
12		Remove/Replace	Latch	NW	$87.71		✓	$48.00		B		
13		Remove/Replace	Latch guide	NW	$1.06		✓			B		
14		Blend	RT Fender w/o antenna				✓			R	$176.00	
15		Remove/Install	RT Rear cover				✓	$32.00		B		
16		Remove/Install	RT Protector				✓	$32.00		B		
17		Remove/Install	RT Ft fender liner				✓	$48.00		B		
18		Remove/Install	RT Rr fender liner w/AWD				✓	$48.00		B		
19			WHEELS				✓					
20		Remove/Install	RT/Front R&I wheel				✓	$16.00		B		
21		Remove/Install	RT/Front R&I wheel				✓	$16.00		B		
22			PILLARS, ROCKER & FLOOR				✓					
23		Remove/Install	RT Rocker molding w/o GTS black				✓	$128.00		B		
24			VEHICLE DIAGNOSTICS				✓					
25		Remove/Replace	Pre-repair scan	NW	$125.00					B		
26		Remove/Replace	Post-repair scan	NW	$125.00					B		
27			MISCELLANEOUS OPERATIONS				✓					

CARS Dawydiak, Inc.
1540 Pine St., S.F. CA 94109-4612
lani@carsauto.com
P:415.940.0185, F:415.840.0348
94-3065583

Final Invoice

RO #:0
Unit #:
Arrived:
Ready:

Estimator: DON MONTALVO

Customer Information		Vehicle Information		Insurance Information	
Name:		Vehicle:	2006 BLACK PORS 911 Carrera	Ins Co:	CUSTOMER PAY
Address:		Style:	2D CPE	Contact:	
		License:		Phone:	
Phone:		VIN:	WP0AB29976S740377	Claim #:	*FUEL DOOR
		Mileage:	13764	Deduct:	$0.00
		Mileage Out:			

28	Remove/Replace	Cover car/bag	NW	$7.50	✓	$32.00	B	
29		FORMULATE COLOR			✓		R	$80.00
30		Wet/Dry Sand, Rub-Out & Buff			✓	$96.00	B	
31		E.P.C.		$5.00	✓		B	
34		Paint Materials	PM	$120.00	✓			

Totals:	RO:	Supp:	Total:
Final (Combined) Totals			
Parts - New	$453.68		$453.68
PARTS TOTAL	$453.68		$453.68
Body Labor	$1,008.00		$1,008.00
Refinish Labor	$384.00		$384.00
LABOR TOTAL	$1,392.00		$1,392.00
Paint Materials	$120.00		$120.00
Miscellaneous	$5.00		$5.00

Sub Total	$1,970.68		$1,970.68
Sales Tax (8.500%)			$27.94
GRAND TOTAL			$1,998.62

CARS Dawydiak, Inc.
1540 Pine St., S.F. CA 94109-4612
lani@carsauto.com
P:415.940.0185, F:415.840.0348
94-3065583

Final Invoice

RO #:0
Unit #:
Arrived:
Ready:

Estimator: DON MONTALVO

Customer Information	Vehicle Information	Insurance Information
Name:	Vehicle: 2006 BLACK PORS 911 Carrera	Ins Co: CUSTOMER PAY
Address:	Style: 2D CPE	Contact:
	License:	Phone:
Phone:	VIN: WP0AB29976S740377	Claim #: *FUEL DOOR
	Mileage: 13764	Deduct: $0.00
	Mileage Out:	

EPA# CAD981385446 **BAR# AD015399**

I AUTHORIZE the dealership to repair my car as deemed necessary to return my car to pre-damage condition or better. I understand that the final bill will accurately reflect the actual repairs. Additionally I am aware that the dealership's estimate and the insurance company estimate are only for the purpose of negotiation and they both may differ substantially from each other and the actual repair as long as the final repair costs are the same as the estimate bottom line figure negotiated with the insurance company.

I UNDERSTAND that ultimately I am responsible for the payment of the cost of repairs and acknowledge an express mechanic`s lien on vehicle to secure the amount of repairs thereto.

IN ADDITION, I do acknowledge that dealership will not be held responsible for loss or damage to vehicle or articles left in vehicle in case of fire, theft, accident or any other cause beyond our control. I grant the dealership and its employee's permission to operate the vehicle on streets or highways for the purpose of repairing or testing.

STORAGE FEES: There is a $195.00 per day storage fee if above said vehicle is left for more than 24 hours after notification that repairs are completed. If vehicle is returned to me before work is performed, a daily storage and diagnostic fee as well as handling charge and reassembly costs may apply.

IF REGARDING an insurance claim, I, the undersigned do hereby constitute and appoint the above mentioned dealership as my trustee and lawful attorney to sign my name on any insurance draft covering any authorized repairs to my automobile, and take such, as may be necessary, to negotiate said drafts.

ADDITIONALLY, I authorize the insurance company paying for the repairs to send all payments direct to the above mentioned dealership at their address listed on the header of the repair order.

DIAGNOSE DAMAGES $750.00 (Includes Estimate Fee, Disassembly & Reassembly/***Fees may change based on type of vehicle***). Dealership to reassemble within 3 days after customer declines repairs.

I ACKNOWLEDGE that repairs have been completed and has been returned to me in pre-damage/loss condition. I certify that repairs have been completed as indicated on the final automated repair estimate.

LABOR CHARGES

The repair or replacement procedure units on which your estimate or billing has been calculated are based on labor procedures established by various labor operations database system suppliers. Since the skill and speed of each technician varies and some repair procedures require two technicians the charges are not based on a sixty minute hour.

Thank you,

Customer Signature: Date: 8-1-2019

AUDIO SYMPHONY
home & car entertainment systems
1525 Van Ness Ave
San Francisco CA 94109
Phone: (415) 292-3300
Fax: ( ) -

THANK YOU

INVOICE #	DATE :	TIME:	PAGE :
85148	09/18/19	9:45 AM	1

SALESPERSON : HATCH

PURCHASE ORDER #

QTY.	ITEM #	DESCRIPTION	PRICE	SUB TOTAL
		PORSCHE 911S 2006 "BLK"		
1	900-019	AVH-W4500NEX AM-FM/CD CP/AA	700.00	700.00
1		WASTE RECYCLE FEE - 4"-14.99"	5.00	5.00
1		KIT, HARNESS, ANT ADPT	82.00	82.00
1	LABOR-EDDIE	INSTALLATION	175.00	175.00
1	300-574	JL AUDIO XD800/8V2 100WX8 AMP	750.00	750.00
1	801-175	JL AUDIO AMP KIT XD-PCS4-1B	109.00	109.00
1		OTHER PARTS/ SUPPLIES	35.00	35.00
1	LABOR-EDDIE	INSTALLATION	395.00	395.00

TERMS & CONDITIONS:
NO RETURNS ON ELECTRONICS. 10 DAY DEFECTIVE EXCHANGE WITH ORIGINAL BOX AND MANUALS . RETURNS ONLY FOR 7 DAYS WITH 20% RESTOCKING FEE. REPAIRS: 90 DAY WARRANTY/ESTIMATE FEE: $40-$80. INSTALLATION WARRANTY: LIFETIME AS LONG AS YOU OWN THE CAR. HOME: SAME AS PRODUCT WARRANTY PERIOD. MINIMUM SUPPLIES & DISPOSABLE TOOLS: 5% OF LABOR OR $10. NOT RESPONSIBLE FOR PERSONAL ITEMS IN YOUR VEHICLE.

SUBTOTAL	2251.00
SALES TAX	142.47
INVOICE TOTAL.....	2393.47

PAID....	M/C	2393.47
	Balance Due:	0.00

S·U·N·C·O·A·S·T MOTORSPORTS

PORSCHE OF SARASOTA • SUNSET VOLKSWAGEN

6895 SOUTH TAMIAMI TRAIL • SARASOTA, FLORIDA 34231

Order 383106

CUST NO.	TAX EXEMPT NUMBER	CUST. P. O. NO.	SHIP VIA	PAY	SOLD BY	INVOICE DATE	INVOICE NO.
777 NO SALES AREA T#231				INTERNET	CHARLES BAILEY	10/07/19	389247 POG

BILL TO

SHIP QTY	B. O. QTY	PART NUMBER / DESCRIPTION	BIN	LIST	NET	AMOUNT
1	0	RDS ROCKER DECAL S	4900	269.95	269.95	269.95

TELEPHONE: (941) 923-1700

www.sunsetautogroup.com

SEE REVERSE SIDE FOR RETURN POLICY

"AS IS" The only warranties applying to this Part(s) are those which may be offered by the manufacturer. The selling dealer hereby expressly disclaims all warranties, either express or implied, including any implied warranties of merchantability or fitness for a particular purpose, and neither assumes nor authorizes any other person to assume for it any liability in connection with the sale of this part(s) and/or service. Buyer shall not be entitled to recover from the selling dealer any consequential damages, damages to property, damages for loss of use, loss of time, loss of profits, or income, or any other incidental damages.

The Purchaser hereby acknowledges that Seller has made available "Warranty Pre-Sale Information" as disclosed in the Warranty Binders pursuant to the Magnuson-Moss Warranty Act.

REC'D BY _____

NO REFUNDS WITHOUT THIS INVOICE

SUBTOTAL	269.95
TAX	0.00
FREIGHT	16.27
PAY THIS AMOUNT	USD 286.22

ALL RETURNS MUST BE ACCOMPANIED WITH ORIGINAL INVOICE BEFORE 20 DAYS.

SPECIAL ORDERS & ELECTRICAL PARTS ARE NON-RETURNABLE.

NO REFUND WITHOUT THIS INVOICE.

35% RESTOCKING CHARGE ON ALL RETURNS UNLESS OTHER ARRANGEMENTS ARE MADE AT TIME OF PURCHASE.

CUSTOMER COPY

0601G389247

11:27:15 PAGE 1 OF 1
NET596

PARTS INVOICE

East Bay Auto Spa
1353 Pine St #B
Walnut Creek,
CA 94596
(925) 930-7190

Invoice

Date	Invoice #
10/31/2019	12178

Bill To	Ship To

R.O. No.	P.O. No.	Install Date	Vehicle Year	Vehicle Make
		10/31/2019	2006	Porsche Carrera

Quantity	Item	Description	Unit Price	Amount
1	Vinyl Application	Vinyl Decal Installation (Driver and Passenger Side Porsche Door Decals)	250.00	250.00
1	window tint	Window tint installation (50% Complete)	400.00	400.00
		Sales Tax	8.50%	0.00

Total	$650.00
Payments/Credits	-$650.00
Balance Due	$0.00

Phone #	Fax #	E-mail	Web Site
(925) 930-7190	(925) 930-9248	eastbayautospa@gmail.com	www.eastbayautospa.com

Invoice

SHARK WERKS
4526 Enterprise Street
Fremont, CA 94538
510-651-0300
info@sharkwerks.com
www.sharkwerks.com

Date	Invoice #
6/29/2021	17327

Bill To	Ship To

VIN#	Mileage	Trans	Make	Model	Year	Color

Item	Quantity	Description	Rate	Amount
Labor	3	Install front and rear sway bar kit	190.00	570.00

Legality: Products are not sold for street use in localities where regulations prohibit such use. Shark Werks disclaims any representation or warranty as to the street legal use of these products. Products sold for racing use may never be used on public highways. Any liability arising from, or related to, the use of any item purchased from Shark Werks is solely the customer's responsibility.

Warranty: Certain Shark Werks branded products may be backed by our Limited Lifetime Warranty to the original purchaser. Any such warranty will be set forth in writing. Unless otherwise reflected in writing, products sold carry no express or implied warranty. All merchandise is in good condition when it leaves our shipping department. In the case of damage or loss, immediately notify the package carrier.

Returns: For detailed information on Shark Werks' return policy, please refer to the Terms and Conditions set forth on the reverse. To return an item, RMA must first be obtained by calling +1 510-651-0300. A 20% handling and restocking fee will be assessed for each item returned.

Subtotal	$570.00
Sales Tax (9.25%)	$0.00
Total	$570.00
Payments/Credits	$0.00
Balance Due	$570.00

ACCEPTANCE OF THIS INVOICE IS AN AGREEMENT NOT TO HOLD SHARK WERKS, INC. AS A COMPANY OR ANY OF ITS EMPLOYEES LIABLE FOR ANY CIRCUMSTANCE OR COSTS THAT MAY ARISE FROM USING ANY OF THESE PRODUCTS.

SHARK WERKS
4526 Enterprise Street
Fremont, CA 94538
510-651-0300
info@sharkwerks.com
www.sharkwerks.com

Invoice

Date	Invoice #
8/3/2020	15746

Bill To	Ship To

VIN#	Mileage	Trans	Make	Model	Year	Color

Item	Quantity	Description	Rate	Amount
Techart_Spring_Kit	1	TechArt Spring Kit	650.00	650.00T
RSS_Engine_Mounts	1	RSS Tarmac Engine Mounts	395.00	395.00T
RSS_Adjustable Rear Link...	1	RSS Adjustable Rear Link Kit	785.00	785.00T
RSS_Adjustable Toe Stee...	1	RSS Adjustable Toe Steer Kit (one axle)	595.00	595.00T
Shipping	1	Shipping	70.00	70.00T

Legality: Products are not sold for street use in localities where regulations prohibit such use. Shark Werks disclaims any representation or warranty as to the street legal use of these products. Products sold for racing use may never be used on public highways. Any liability arising from, or related to, the use of any item purchased from Shark Werks is solely the customer's responsibility.

Warranty: Certain Shark Werks branded products may be backed by our Limited Lifetime Warranty to the original purchaser. Any such warranty will be set forth in writing. Unless otherwise reflected in writing, products sold carry no express or implied warranty. All merchandise is in good condition when it leaves our shipping department. In the case of damage or loss, immediately notify the package carrier.

Returns: For detailed information on Shark Werks' return policy, please refer to the Terms and Conditions set forth on the reverse. To return an item, RMA must first be obtained by calling +1 510-651-0300. A 20% handling and restocking fee will be assessed for each item returned.

Subtotal	$2,495.80
Sales Tax (9.25%)	$230.79
Total	$2,725.79
Payments/Credits	$0.00
Balance Due	$2,725.79

ACCEPTANCE OF THIS INVOICE IS AN AGREEMENT NOT TO HOLD SHARK WERKS, INC. AS A COMPANY OR ANY OF ITS EMPLOYEES LIABLE FOR ANY CIRCUMSTANCE OR COSTS THAT MAY ARISE FROM USING ANY OF THESE PRODUCTS.

SHARK WERKS
4526 Enterprise Street
Fremont, CA 94538
510-651-0300
info@sharkwerks.com
www.sharkwerks.com

Invoice

Date	Invoice #
9/23/2020	15942

Bill To	Ship To

VIN#	Mileage	Trans	Make	Model	Year	Color

Item	Quantity	Description	Rate	Amount
Labor	8	Install spring kit	190.00	1,520.00
Labor	4	Install rear links & engine mounts	190.00	760.00
Numeric_Shifter	1	Numeric Racing Precision Shifter -discounted	669.00	669.00T
Labor	1.5	Install shifter	190.00	285.00

Legality: Products are not sold for street use in localities where regulations prohibit such use. Shark Werks disclaims any representation or warranty as to the street legal use of these products. Products sold for racing use may never be used on public highways. Any liability arising from, or related to, the use of any item purchased from Shark Werks is solely the customer's responsibility.

Warranty: Certain Shark Werks branded products may be backed by our Limited Lifetime Warranty to the original purchaser. Any such warranty will be set forth in writing. Unless otherwise reflected in writing, products sold carry no express or implied warranty. All merchandise is in good condition when it leaves our shipping department. In the case of damage or loss, immediately notify the package carrier.

Returns: For detailed information on Shark Werks' return policy, please refer to the Terms and Conditions set forth on the reverse. To return an item, RMA must first be obtained by calling +1 510-651-0300. A 20% handling and restocking fee will be assessed for each item returned.

Subtotal	$3,234.00
Sales Tax (9.25%)	$61.88
Total	$3,295.88
Payments/Credits	$0.00
Balance Due	$3,295.88

ACCEPTANCE OF THIS INVOICE IS AN AGREEMENT NOT TO HOLD SHARK WERKS, INC. AS A COMPANY OR ANY OF ITS EMPLOYEES LIABLE FOR ANY CIRCUMSTANCE OR COSTS THAT MAY ARISE FROM USING ANY OF THESE PRODUCTS.

CUSTOMER #: 504789

173361

PORSCHE

INVOICE

PAGE 1

Porsche Walnut Creek
2555 North Main Street
Walnut Creek, CA 94597

(925) 280-4900
Fax: (925) 280-4912
www.steadporsche.com

SERVICE ADVISOR: 841 JOHN KIM

COLOR	YEAR	MAKE/MODEL	VIN	LICENSE	MILEAGE IN / OUT	TAG
BLACK	06	PORSCHE 997S COUPE	WP0AB29976S740377	CANUFLY	16998/16999	T127

DEL. DATE	PROD. DATE	WARR. EXP.	PROMISED	PO NO.	RATE	PAYMENT	INV. DATE
23AUG05	D014JUL05	23AUG2009	17:00 01OCT20		0.00	CASH	02OCT20

R.O. OPENED	READY	OPTIONS: ENG:68600946
09:28 01OCT20	09:33 02OCT20	

LINE OPCODE TECH TYPE HOURS LIST NET TOTAL

% CLIENT REQUEST TO HAVE CYLINDER WALLS INSPECTED FOR DAMAGE - PERFORM
LEAKDOWN
01 *ENGINE/CYL HEAD WORK
909 CP
,,,,16999 630.00 630.00
,,,,performed scan . checked for misfires first . on start up cylinder
,,,,five had a misfire then 4 and 6 had one misfire under the course of a
,,,,minute.
,,,,removed coils and plugs found heavy scoring in cylinders 3 2 5 6
,,,,cylinders 1 and 4 had light scoring re assembled plugs and coils,
,,,,est for engine rebuild $33,588.88 before tax.
****

B CHECK AND SET TIRE PRESSURES, TORQUE WHEELS AND MEASURE TIRES
TP CHECK AND SET TIRE PRESSURES, TORQUE WHEELS
AND MEASURE TIRES
909 CP
,,,,16998 lf 40 psi rf 40 psi lr 44 psi rr 44 psi 0.00 0.00
****

C PERFORM PORSCHE MULTI-POINT INSPECTION
MPI PERFORM PORSCHE MULTI-POINT INSPECTION
909 CP
,,,,16998 performed mpi 0.00 0.00
****

EST: 1,050.00 01OCT20 09:28 SA: 841
CONTACT:
****

BAR# AK196618 EPA# 000102813

Original Estimate $

Please read the important information on the reverse side invoice!

I acknowledge receipt of this invoice.

☐ I acknowledge the warranty repairs performed.

☐ I acknowledge notice and oral approval of additional warranty repairs discovered and corrected during this repair visit.

Signature X _____

I acknowledge notice and oral approval of an increase in the original estimate price.

Initials X _____

PORSCHE WALNUT CREEK

2555 NORTH MAIN STREET
WALNUT CREEK, CA 94597
(925) 280-4900

BAR# ARD-196618 EPA# CAL000902147

DESCRIPTION	TOTALS
LABOR AMOUNT	630.00
PARTS AMOUNT	0.00
GAS, OIL, LUBE	0.00
SUBLET AMOUNT	0.00
MISC. CHARGES	0.00
TOTAL CHARGES	630.00
LESS INS/ADJ.	0.00
SALES TAX	0.00
PLEASE PAY THIS AMOUNT	630.00

SHARK WERKS

4526 Enterprise Street
Fremont, CA 94538
510-651-0300
info@sharkwerks.com
www.sharkwerks.com

Invoice

Date	Invoice #
3/3/2021	16741

Bill To	Ship To

VIN#	Mileage	Trans	Make	Model	Year	Color

Item	Quantity	Description	Rate	Amount
Misc. Hardware	1	Front and Rear Sway Bar Kit (24mm, rear adjustable) for 2006 997S	716.00	716.00T
In-Bound Shipping	1	Shipping	59.00	59.00T
		Estimate for labor to install: $570		

Parts Paid via AMEX on 3/3/2021

Legality: Products are not sold for street use in localities where regulations prohibit such use. Shark Werks disclaims any representation or warranty as to the street legal use of these products. Products sold for racing use may never be used on public highways. Any liability arising from, or related to, the use of any item purchased from Shark Werks is solely the customer's responsibility.

Warranty: Certain Shark Werks branded products may be backed by our Limited Lifetime Warranty to the original purchaser. Any such warranty will be set forth in writing. Unless otherwise reflected in writing, products sold carry no express or implied warranty. All merchandise is in good condition when it leaves our shipping department. In the case of damage or loss, immediately notify the package carrier.

Returns: For detailed information on Shark Werks' return policy, please refer to the Terms and Conditions set forth on the reverse. To return an item, RMA must first be obtained by calling +1 510-651-0300. A 20% handling and restocking fee will be assessed for each item returned.

Subtotal	$775.00
Sales Tax (9.25%)	$71.69
Total	$846.69
Payments/Credits	$0.00
Balance Due	$846.69

ACCEPTANCE OF THIS INVOICE IS AN AGREEMENT NOT TO HOLD SHARK WERKS, INC. AS A COMPANY OR ANY OF ITS EMPLOYEES LIABLE FOR ANY CIRCUMSTANCE OR COSTS THAT MAY ARISE FROM USING ANY OF THESE PRODUCTS.

Engine Builders Supply Co
4068 S. McCarran Blvd Unit B
Reno NV 89502 USA

Tel:775-673-1300 Fax:775-673-2088
Toll Free:1-800-462-3774

Email: ebsracing@aol.com

EBS RACING
PORSCHE PARTS EXCLUSIVELY

check out our new web site

www.EBSRACING.com

Invoice

Date	Invoice #
05/27/21	105803

updated: 05/28/2021 9:41 AM 55222

Bill To:

Final Bill –

Ship To:

Phone:

Card #

Customer P.O.#	Salesperson	Department	Ship Method	Terms
997S 3.8-4.0	Don		Customer Request	VISA/MC

Item Code	Product Name	Description/Mfg.	Qty	Price	Ext. Price
000 043 305 33	sealant, 80ml, Doboseal 224N		1	53.50	53.50
05051	Brakleen, brake cleaner	1 gallon	1	25.00	25.00
0PB 105 638	thrust washer	996 & 997 3.6, 3.8/987 3.4/9A1	2	19.39	38.78
900 041 004 01	lock ring 10x1		1	0.55	0.55
987 105 254 00	intake cam bolt	996/997/987	2	14.15	28.30
996 101 209 04	main bearing shell	996 3.6/997 all	14	31.90	446.60
996 103 121 62 RACE	coated rod bearing set	boxster/996/997	1	235.00	235.00
996 104 115 60M	valve guide, mang/bronze	Boxster/996	12	8.00	96.00
996 105 041 72 OEM	hyd valve lifter OEM	996/Boxster/Cayenne V8	12	17.50	210.00
996 105 054 01	guide rail cylinder 1-3	996	1	58.95	58.95
996 105 118 01	valve spring, exhaust	996/997 3.6-3.8	12	6.55	78.60
996 105 152 01	timing chain	996 3.6-	2	49.50	99.00
996 105 156 00	tensioner blade, 1-3	996	1	37.25	37.25
996 105 158 00	tensioner blade, 4-6	996	1	35.45	35.45
996 105 164 00	guide rail cylinder 4-6	996	1	31.55	31.55
996 105 165 55	tensioner blade, int sha	Boxster/996/997	1	36.15	36.15
996 105 166 51 G	guide rail	996	1	43.85	43.85
996 105 180 58	chain tensioner, IMS	996 '01-	1	84.00	84.00
996 105 186 02	chain adjuster, 1-3	996	1	114.00	114.00
996 105 188 02	chain tensioner, 4-6	996	1	138.50	138.50
996 105 255 25	hydraulic lifters intake	996	12	142.50	1,710.00
996 105 939 00	valve spring, intake	996/997 3.6-3.8	12	10.25	123.00
996 106 013 59 160	low temp 160 degree w/ho	986/996/987/997	1	46.00	46.00
997 100 903 3.8-4.0	gasket set w/101mm conversion	997 Carrera S 4.0 liter conversion	1	525.00	525.00
997 106 011 06 PIER	water pump Pierburg, OEM	997	1	195.50	195.50
997 107 025 02	heat exchanger, Behr		1	179.50	179.50
997 107 038 00	oil seperator	997 3.8	1	94.50	94.50
ARP 4707	ARP head stud kit	Boxster/996/997 Gen1	1	495.00	495.00
ARP 5001	crank carrier bolt set	Boxster/996/997	1	112.50	112.50
Coating 101 6cyl	coating, dry film lub	main brg set, 6cyl	1	85.00	85.00

NOTES

Subtotal	24,321.92
Tax	0.00
Freight	0.00
Total	24,321.92
Paid	0.00
Balance	24,321.92

EBS CO. assumes no responsibility or liability for any injury or damages arising from use of its products. Liability is limited to the original cost of merchandise. * No returns after 30 days * No returns on electrical or special ordered items * Cores must be in original box * All returns must have a RMA # and are subject to a 20% restocking fee * Claims for shortages or damaged products must be filed within 5 days upon receiving you order *

Engine Builders Supply Co
4068 S. McCarran Blvd Unit B
Reno NV 89502 USA

Tel:775-673-1300 Fax:775-673-2088
Toll Free:1-800-462-3774

Email: ebsracing@aol.com

EBS RACING
PORSCHE PARTS EXCLUSIVELY

check out our new web site

www.EBSRACING.com

Invoice

Date	Invoice #
05/27/21	105803

updated: 05/28/2021 9:41 AM 55222

Bill To:	Ship To:

Card #

Customer P.O.#	Salesperson	Department	Ship Method	Terms
997S 3.8-4.0	Don		Customer Request	VISA/MC

Item Code	Product Name	Description/Mfg.	Qty	Price	Ext. Price
Coating 103 02 CP	Coating, Piston Skirt	light coating	6	27.50	165.00
CP 101x12.0:1 4.0	997S 3.8-4.0 liter conversion	w/CP rings for ductile/cast iron bore	1	1,195.00	1,195.00
FGR5KQE0	spark plug BOSCH	996 02-/997/987	6	6.60	39.60
LAS 99mm Sleeve Set	99mm Moly2000 Ductile Iron	sleeves only	1	845.00	845.00
LN 106 IMS Solution	IMS Solution Kit	single row bearing, late large	1	1,300.00	1,300.00
LN 106-00	.5qt deep sump kit with p/u	M96/M97	1	225.00	225.00
LN 106-07	billet drain plug	996/boxster	1	23.50	23.50
PTR RS 997	Pauter lightweight rods	996 3.6/997	1	1,495.00	1,495.00
Schrick 0454A1921-L0	exhaust camshaft, left	996/997 3.6	1	495.00	495.00
Schrick 0454A1921-R0	exhaust camshaft, right	996/997 3.6	1	495.00	495.00
Schrick 0454E1841-L0	intake camshaft, left	996/997 3.6	1	665.00	665.00
Schrick 0454E1841-R0	intake camshaft, right	996/997 3.6	1	665.00	665.00
Service 911 102 2	micro polish & magnaflux	911/930	1	125.00	125.00
Service 996 100 LB	assemble eng long block	996	1	3,250.00	3,250.00
Service 996 101 05a	hot tank crankcase & crank girdle	for engines with coolant/oil mix	1	350.00	350.00
Service 996 103 08	install ductile iron liners	Boxster/996/997	1	1,700.00	1,700.00
Service 996 104 01	valve job	996/Boxster	1	945.00	945.00
Service 996 104 12	custom port work, CNC finish	996/997	1	1,595.00	1,595.00
Service 996 104 16	R&R valve guide, each		12	29.50	354.00
997 101 212 01	rear crank & crank seal support	996/997/Boxster/Cayman	1	250.00	250.00
996 105 271 02 TRW	intake valve TRW	996 3.6	12	12.85	154.20
999 073 092 01	flywheel bolt M10x50	8 req'd, Box/996 C2/4	8	0.98	7.84
Service 996 100 R&R	R&R engine and transmission	Boxster/996	1	1,500.00	1,500.00
000 043 305 75	antifreeze/coolant 1 gallon ZEREX	as needed	2	24.50	49.00
000 043 206 56	hydraulic fluid CHF 202		1	14.50	14.50
Napa Gold 1348	oil filter	use w/IMS solution	1	8.95	8.95
900 123 106 30	seal ring alum18x24	928/944, 996/997	1	0.20	0.20
JG BR40 quart	10w40 Driven break-in oil	quart	20	8.99	179.80
999 075 074 00	hex bolt exh manifold		12	2.90	34.80
996 107 123 50	oil pump piston cover seal		1	0.00	0.00

NOTES

Subtotal	24,321.92
Tax	0.00
Freight	0.00
Total	24,321.92
Paid	0.00
Balance	24,321.92

EBS CO. assumes no responsibility or liability for any injury or damages arising from use of its products. Liability is limited to the original cost of merchandise. * No returns after 30 days * No returns on electrical or special ordered items * Cores must be in original box * All returns must have a RMA # and are subject to a 20% restocking fee * Claims for shortages or damaged products must be filed within 5 days upon receiving you order *

Engine Builders Supply Co
4068 S. McCarran Blvd Unit B
Reno NV 89502 USA

Tel:775-673-1300 Fax:775-673-2088
Toll Free:1-800-462-3774

Email: ebsracing@aol.com

EBS RACING
PORSCHE PARTS EXCLUSIVELY

check out our new web site

www.EBSRACING.com

Invoice

Date	Invoice #
05/27/21	105803

updated: 05/28/2021 9:41 AM 55222

Bill To:	Ship To:

Card #

Customer P.O.#	Salesperson	Department	Ship Method	Terms
997S 3.8-4.0	Don		Customer Request	VISA/MC

Item Code	Product Name	Description/Mfg.	Qty	Price	Ext. Price
997 602 104 04 BERU	ignition coil, BERU	Box/996	6	38.50	231.00
997 605 123 00 Bosch	fuel injector	997 3.6/3.8	6	50.00	300.00
996 102 151 66 OPTI	poly rib belt 6PK2115	996/Boxster Optibelt	1	18.00	18.00
997 606 168 01	02 sensor before cat	997 06-	2	94.75	189.50

Subtotal	24,321.92
Tax	0.00
Freight	0.00
Total	24,321.92
Paid	0.00
Balance	24,321.92

EBS CO. assumes no responsibility or liability for any injury or damages arising from use of its products Liability is limited to the original cost of merchandise. * No returns after 30 days * No returns on electrical or special ordered Items * Cores must be in original box * All returns must have a RMA # and are subject to a 20% restocking fee * Claims for shortages or damaged products must be filed within 5 days upon receiving you order *

CARRILLO
1902 Mc Gaw Avenue
Irvine, CA 92614
949-567-9000
Fax: 949-567-9010
WWW.CP-CARRILLO.COM

BULLET SERIES PISTONS & RODS

ARIAS RACING PISTONS

PISTON SPEC SHEET

CUSTOMER INFORMATION

CUSTOMER NAME:	Engine Builders Supply Co.
PO NUMBER:	82455
JOB NUMBER:	414546
DATE PRINTED:	12/4/2020
PART NUMBER:	

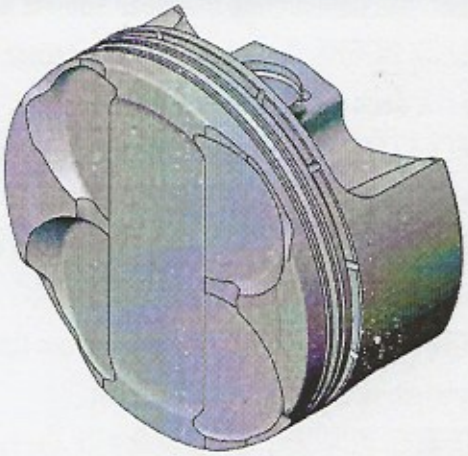

ENGINE SPECIFICATION

MOTOR:	Porsche	HEAD:	997	COMP RATIO:	12:1	ROD LENGTH:	
MOTOR SIZE:	3.8	HEAD CC:	41	BLOCK HEIGHT:		TOP RING RADIAL:	
BORE:	3.9763	INT VALVE DIA:		GASKET THK:	.032	2nd RING RADIAL:	
STROKE:	82.800	EXT VALVE DIA:		DECK CLEARANCE:	.000	OIL RING RADIAL:	

PISTON SPECIFICATION

FORGING#:	X97			DISH/DEPTH:	-.030	PIN DIAMETER:	.866
DOME HEIGHT:	.000			CAM PROFILE:	10F45C65L18	PIN FIT TO:	.8671
DOME/DISH VOL:		TOP LAND VOL.:		PISTON TO CYL CLEAR:	.0023	PIN LENGTH:	2.250

RING DATA	GROOVE WIDTH		GROOVE DIAMETER	
	INCH	METRIC	INCH	METRIC
TOP RING	.0400	1.016	3.6400	92.456
2ND RING	.0480	1.2192	3.6120	91.7448
OIL RING	.1110	2.8194	3.6790	93.4466

VALVE RELIEF	INTAKE		EXHAUST	
	INCH	METRIC	INCH	METRIC
POCKET DEPTH	-.2400	-6.096	-.2400	-6.096
POCKET ANGLE	15.000°		15.000°	
POCKET DIA.	1.6500	41.910	1.6500	41.910

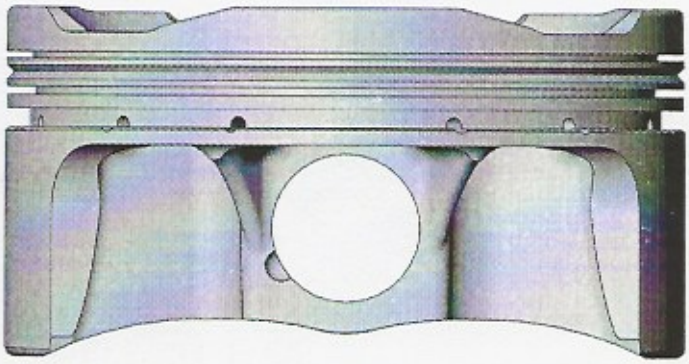

COATINGS:	Skirt Coating	
PISTON WEIGHT:	425	
COMPRESSION HEIGHT:	1.294	CENTER OF PIN TO DECK
TURN DIA:	3.9740	
GAUGE POINT:	.400	INCHES UP FROM BOTTOM OF SKIRT

PORSCHE 997 3.6/3.8L

PAUTER MACHINE
BILLET RODS

.65500

KEEP THIS TAG FOR FUTURE REFERENCE!

P/N 997-220-560-1420F

Set ID # J-2.5.8.13.15.23

Center to center length 5.591

Big end weight (in grams) 401

Overall weight (in grams) 552

Torque specifications 50 ft/lbs

Small end diameter .8665

Big end diameter 2.2048

Big end width .758

Small end width .819

Material spec E4340 C'MOLY STEEL

This rod set was manufactured by

PAUTER MACHINE CO. INC

367 ZENITH ST. CHULA VISTA, CA 91911
(619) 422-5384 FAX (619) 422-1924

Automotive Racing Products
1863 Eastman Avenue
Ventura, Ca 93003

ARP automotive Racing products

PROFESSIONAL QUALITY FASTENERS

Tel: (805) 339-2200
Fax: (805) 650-0742
www.arp-bolts.com

INSTALLATION METHOD FOR HEAD STUD KITS

Part Number: 204-4707 Application: Porsche 3.4L Non-Turbo water-cooled engine

1. **Always verify the part number for your application with the part number on the side of box and the part number on the instruction sheet. This will help ensure you have the correct installation procedure for your specific application before installing any components.**
2. Clean and inspect all hardware prior to installation. Look for obvious defects or shipping damages, plus proper fit, length and dimension.
3. To ensure proper thread engagement and accurate torque readings, clean ALL threads in the block. Chase if necessary with ARP Thread Chaser, part number 912-0003 (M10 X 1.5). .
4. Screw the head studs into the left hand and right hand engine cases "HAND TIGHT ONLY".
   NOTE: LOCTITE MAY BE USED IF A PERMANENT MOUNTING OF THE STUDS IS PREFERRED.
5. Install the cylinder heads as described in the Porsche factory service manual. Check for binding or misalignment.
6. Lubricate the stud threads, nuts and washers with ARP ULTRA-TORQUE FASTENER ASSEMBLY LUBRICANT. Then install the washers and the nuts onto the studs and tighten them hand tight. **ARP recommends using the ARP ULTRA-TORQUE FASTENER ASSEMBLY LUBRICANT that is provided with each kit as opposed to motor oil. This is due to higher friction on the studs as well as inconsistencies in the clamping force of the fasteners when motor oil or other low quality lubricants are used.**

PRELOAD (TORQUE) RECOMMENDATIONS

7. Following the manufacturers recommended torque sequence tighten the nuts **in two equal steps to 60 ft lbs with ARP ULTRA-TORQUE FASTENER ASSEMBLY LUBRICANT.**

Note: ARP Ultra-Torque Fastener Assembly Lubricant has been specifically designed to reduce tension preload scatter and eliminate the need to cycle high performance engine fasteners before final installation. ARP Ultra-Torque far surpasses all requirements offered by previous ARP lubricants in terms of fastener preload repeatability and performance lubricating properties. For more information on ARP Ultra-Torque visit our website at www.arp-bolts.com or call 1 800-826-3045.

Bolt Torque Sequence

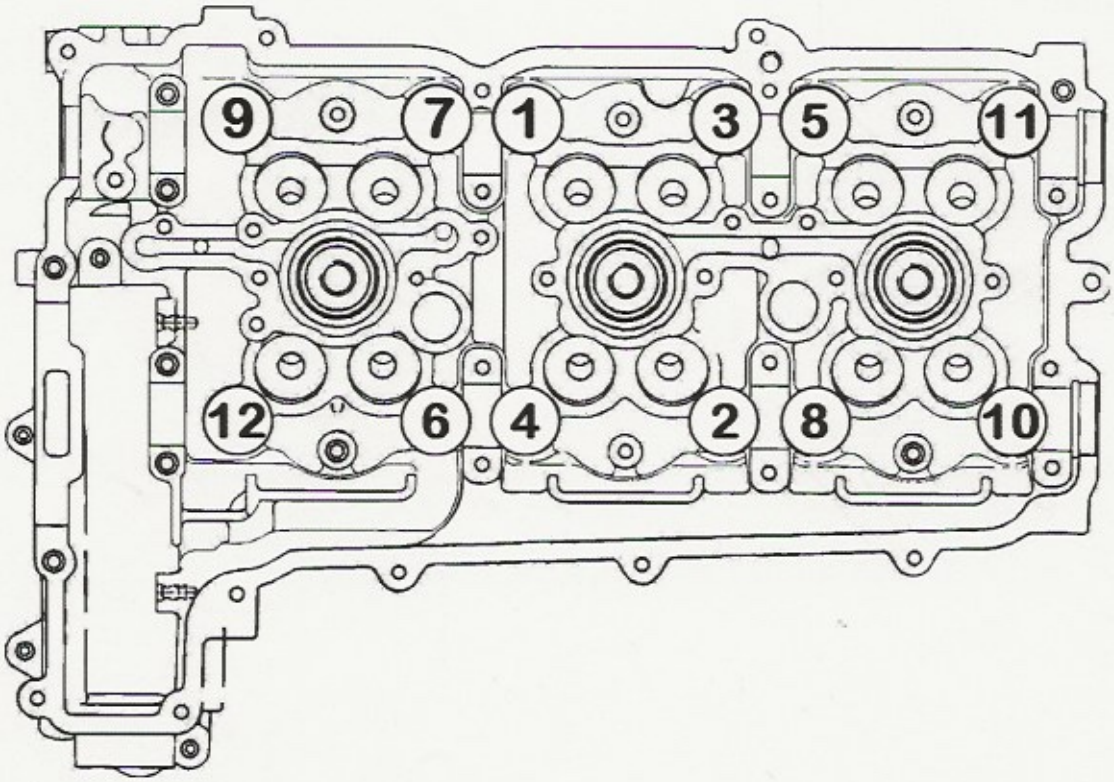

Automotive Racing Products
1863 Eastman Avenue.
Ventura, Ca. 93003

ARP automotive Racing products

PROFESSIONAL QUALITY FASTENERS

Tel: (805) 339-2200
Fax (805) 650-0742
www.arp-bolts.com

INSTALLATION METHOD FOR PRO SERIES MAIN BOLT KITS

Part Number: 204-5001 Application: Porsche 3.4L-3.6L (Non Turbo) water-cooled engines

1. To ensure proper thread engagement and accurate torque readings, clean **ALL** threads in the block. Chase the threads if necessary.
2. Clean and inspect all hardware prior to installation. Look for obvious defects or shipping damages, plus proper fit, length and dimension.
3. Make sure there is an adequate chamfer around the bolt holes on the main bearing cap housing to clear the radius on the under head of the bolt.
4. Install the bearings and the crankshaft into the main bearing housing and assemble the housing halves according the Porsche factory service manual. Check for binding or misalignment.
5. Lubricate the under head of the bolt and the bolt threads with ARP ULTRA-TORQUE FASTENER ASSEMBLY LUBRICANT. Then install the bolts into the main bearing housing and tighten them hand tight. **ARP recommends using the ARP ULTRA-TORQUE FASTENER LUBRICANT that is provided with each kit as opposed to motor oil. This is due to higher friction on the bolts as well as inconsistencies in the clamping force of the fasteners when motor oil (or low quality lubricant) is used.**

PRELOAD (TORQUE) RECOMMENDATIONS

6. Following the manufacturers recommended torque sequence tighten the bolts **in three equal steps to 50 ft lbs with ARP ULTRA-TORQUE FASTENER ASSEMBLY LUBRICANT.**

FOOTNOTE: When changing from factory fasteners to high strength fasteners, clamping force and tolerances will change, therefore it will be necessary to check the main bearing bores for proper size and out of round condition after installation of the bolts and align hone the cylinder block if necessary. The main bores should always be align honed using the same fasteners and lubricant which will be installed during final engine assembly at the recommended preload.

Bolt Torque Sequence

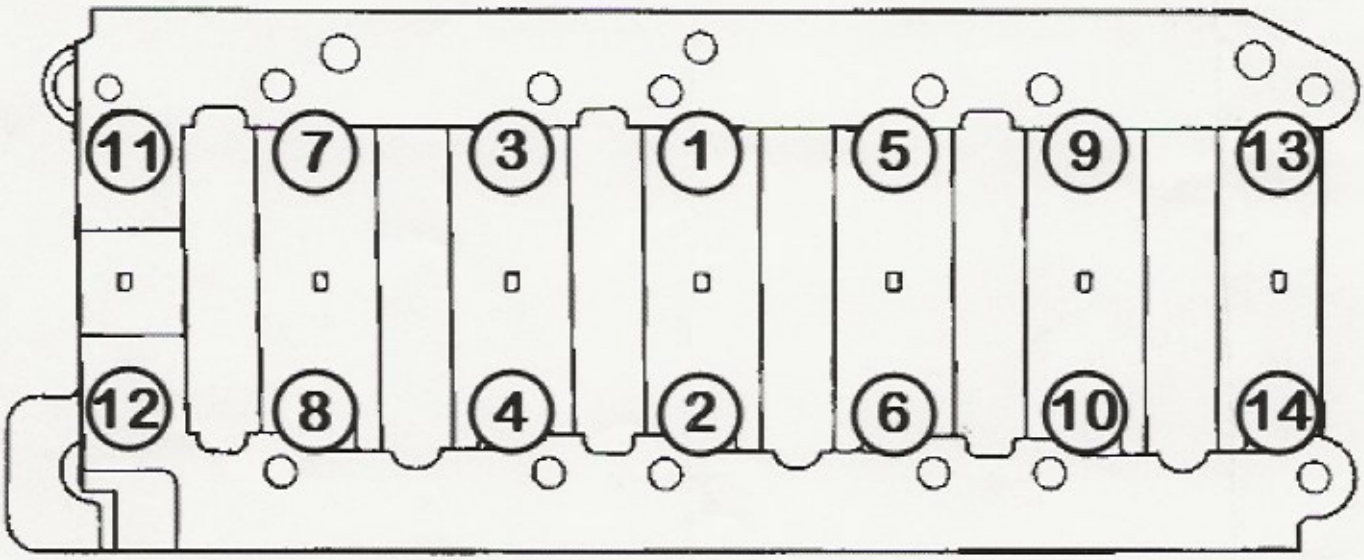

SuncoastParts.com

SUNCOAST PORSCHE • SARASOTA, FL

Order 621736

CUST NO.	TAX EXEMPT NUMBER	CUST. P. O. NO.	SHIP VIA	PAY	SOLD BY	INVOICE DATE	INVOICE NO.
12259 OUT OF STATE 1-877-923-1700 T#231				INTERNET	NICK TERRENZI	06/07/21	497923 POG

BILL TO

PAYPAL
QUESTIONS?? PLEASE CALL OUR
SALES TEAM @ 1-877-923-1700

SHIP TO

SHIP QTY	B. O. QTY	PART NUMBER / DESCRIPTION	BIN	LIST	NET	AMOUNT
1	0	997-201-980-00 FUEL TANK CAP, A	6382	184.74	139.95	139.95

TELEPHONE:
1-877-923-17000

SuncoastParts.com

SEE REVERSE SIDE FOR RETURN POLICY

"AS IS" The only warranties applying to this Part(s) are those which may be offered by the manufacturer. The selling dealer hereby expressly disclaims all warranties, either express or implied, including any implied warranties of merchantability or fitness for a particular purpose, and neither assumes nor authorizes any other person to assume for it any liability in connection with the sale of this part(s) and/or service. Buyer shall not be entitled to recover from the selling dealer any consequential damages, damages to property, damages for loss of use, loss of time, loss of profits, or income, or any other incidental damages.

The Purchaser hereby acknowledges that Seller has made available "Warranty Pre-Sale Information" as disclosed in the Warranty Binders pursuant to the Magnuson-Moss Warranty Act.

REC'D BY _____

NO REFUNDS WITHOUT THIS INVOICE

SUBTOTAL	139.95
TAX	0.00
OUT OF ST TX	13.30
FREIGHT	12.26
PAY THIS AMOUNT	165.51

ALL RETURNS MUST BE ACCOMPANIED WITH ORIGINAL INVOICE BEFORE 20 DAYS.
SPECIAL ORDERS & ELECTRICAL PARTS ARE NON-RETURNABLE.
NO REFUND WITHOUT THIS INVOICE.
35% RESTOCKING CHARGE ON ALL RETURNS UNLESS OTHER ARRANGEMENTS ARE MADE AT TIME OF PURCHASE.

CUSTOMER COPY

10:34:05 PAGE 1 OF 1
NET596

0601G497923

PARTS INVOICE

Invoice

Date:	06/18/2021
Invoice #:	2297
BAR #:	00239756
EPA #:	CAL000429229

PACIFIC POWER MOTORSPORTS
GERMAN AUTOWERK

PPM German Autowerk
1413 Carlback Avenue

Walnut Creek, CA 94596

Phone	9259372277
Email	eric@ppmga.com
Web	www.ppmga.com
F.E.I.N.	86-2663833

License Plate	CANUFLY
Make/Model	2006 Porsche 997 S
Odometer	18040
Color	Black
VIN	WP0AB29976S740377
Next Srvc	12/18/2021

Item	Description	Quantity	Unit Price	Tax	Total
OIL SERVICE - PORSCHE 997 S ENGINE OIL SERVICE					
LABOR, OIL SERVICE	Porsche 997 S Engine Oil Service. Replace Engine oil and engine oil filter with new oil and filter.	1.40	$190.00	$0.00	$266.00
ENGINE MECH, FILTER	Porsche 997 S Engine Oil Filter Kit, New	1.00	$24.94	$2.18	$27.12
FLUIDS, OIL (ENGINE)	Engine Oil - Total Classic SN - 10W-40 Conventional (1 Quart)	8.75	$8.99	$6.88	$85.54
HAZ FEE, OIL (ENGINE)	Hazardous Material Disposal Fee, Engine Oil	1.00	$5.20	$0.00	$5.20
VISUAL MAINTENANCE	Visual Maintenance Inspection	1.00	$0.00	$0.00	$0.00
		OIL SERVICE Total	**$374.80**	**$9.06**	**$383.86**

Subtotal	$374.80
Sales Tax	$9.06
Total	**$383.86**
Balance Due	**$0.00**
Paid Credit Card	**$383.86**

Invoice Notes

Notes:

a. After above service, vehicle was brought to operation temperature and fluid levels where checked and topped off as needed.

b. Tire pressures set to: Front 37 psi and Rear 44 psi

c. Tire tread remaining: Front 9/32" and Rear 7/32"

d. Brake pad material remaining: Front 8 mm and rear 10 mm

e. Recorded Fault Codes From All Modules And Then Cleared All Faults. See Attached Sheets.

Bureau Of Automotive Repair License # 00239756

Most parts are warranted by their manufacturer, usually for 90 days from the date of purchase, unless otherwise specified. Used or customer supplied parts carry NO WARRANTY EXPRESS OR IMPLIED. Pacific Power Motorsports warranties their work for 3 months or 3000 miles. Parts and labor used for track or competition purposes are warranted against manufacturer's defects only. We do NOT recommend illegal modifications for street legal automobiles.

Estimate

SHARK WERKS
4526 Enterprise Street
Fremont, CA 94538
510-651-0300
info@sharkwerks.com
www.sharkwerks.com

Date	Estimate #
8/4/2021	4308

Name / Address	Ship To

VIN#	Mileage	Trans	Model	Year	Color

Item	Description	Qty	Cost	Total
Misc. Hardware	HRE P305M, 19-inch for 997S, Gloss Silver, Silver+Black center caps (Discouned from 6300 for repeat customer)	1	5,922.45	5,922.45T
In-Bound Shipping	In-bound shipping for HRE Wheels	1	200.00	200.00T
Service	Service - Mount & Balance	1	250.00	250.00

Legality: Products are not sold for street use in localities where regulations prohibit such use. Shark Werks disclaims any representation or warranty as to the street legal use of these products. Products sold for racing use may never be used on public highways. Any liability arising from, or related to, the use of any item purchased from Shark Werks is solely the customer's responsibility.
Warranty: Certain Shark Werks branded products may be backed by our Limited Lifetime Warranty to the original purchaser. Any such warranty will be set forth in writing. Unless otherwise reflected in writing, products sold carry no express or implied warranty. All merchandise is in good condition when it leaves our shipping department. In the case of

Subtotal	$6,372.45
Sales Tax (10.25%)	$627.55
Total	$7,000.00

Returns: For detailed information on Shark Werks' return policy, please refer to the Terms and Conditions set forth on the reverse. To return an item, RMA must first be obtained by calling +1 510-651-0300. A 20% handling and restocking fee will be assessed for each item returned.

ACCEPTANCE OF THIS ESTIMATE IS AN AGREEMENT NOT TO HOLD SHARK WERKS, INC. AS A COMPANY OR ANY OF ITS EMPLOYEES LIABLE FOR ANY CIRCUMSTANCE OR COSTS THAT MAY ARISE FROM USING ANY OF THESE PRODUCTS.

Invoice

SHARK WERKS
4526 Enterprise Street
Fremont, CA 94538
510-651-0300
info@sharkwerks.com
www.sharkwerks.com

Date	Invoice #
10/27/2021	17799

Bill To	Ship To

VIN#	Mileage	Trans	Make	Model	Year	Color

Item	Quantity	Description	Rate	Amount
Misc. Hardware	1	Bosch OEM spec (70AH) AGM battery	310.00	310.00T
Labor	0.5	Labor - install battery and shift knob	220.00	110.00

Legality: Products are not sold for street use in localities where regulations prohibit such use. Shark Werks disclaims any representation or warranty as to the street legal use of these products. Products sold for racing use may never be used on public highways. Any liability arising from, or related to, the use of any item purchased from Shark Werks is solely the customer's responsibility.

Warranty: Certain Shark Werks branded products may be backed by our Limited Lifetime Warranty to the original purchaser. Any such warranty will be set forth in writing. Unless otherwise reflected in writing, products sold carry no express or implied warranty. All merchandise is in good condition when it leaves our shipping department. In the case of damage or loss, immediately notify the package carrier.

Returns: For detailed information on Shark Werks' return policy, please refer to the Terms and Conditions set forth on the reverse. To return an item, RMA must first be obtained by calling +1 510-651-0300. A 20% handling and restocking fee will be assessed for each item returned.

Subtotal	$420.00
Sales Tax (10.25%)	$31.78
Total	$451.78
Payments/Credits	$0.00
Balance Due	$451.78

ACCEPTANCE OF THIS INVOICE IS AN AGREEMENT NOT TO HOLD SHARK WERKS, INC. AS A COMPANY OR ANY OF ITS EMPLOYEES LIABLE FOR ANY CIRCUMSTANCE OR COSTS THAT MAY ARISE FROM USING ANY OF THESE PRODUCTS.

Invoice

SHARK WERKS
4526 Enterprise Street
Fremont, CA 94538
510-651-0300
info@sharkwerks.com
www.sharkwerks.com

Date	Invoice #
11/5/2021	17844

Bill To	Ship To

VIN#	Mileage	Trans	Make	Model	Year	Color

Item	Quantity	Description	Rate	Amount
Misc. Hardware	1	Wheel Bolt Set Front / Rear (+7mm Black Powdercoat)	160.00	160.00T
In-Bound Shipping	1	Shipping for Wheel Bolts	22.00	22.00T
Labor	1	Replace Wheel Bolts	55.00	55.00
Misc. Hardware	1	OEM Porsche Alternator 997	525.00	525.00T
Labor	2	Labor - Diagnose electric fault. Found defective alternator under-charging with accessories. Drain Coolant, Replace Alternator. Tested and confirmed to be fixed.	220.00	440.00

Legality: Products are not sold for street use in localities where regulations prohibit such use. Shark Werks disclaims any representation or warranty as to the street legal use of these products. Products sold for racing use may never be used on public highways. Any liability arising from, or related to, the use of any item purchased from Shark Werks is solely the customer's responsibility.

Warranty: Certain Shark Werks branded products may be backed by our Limited Lifetime Warranty to the original purchaser. Any such warranty will be set forth in writing. Unless otherwise reflected in writing, products sold carry no express or implied warranty. All merchandise is in good condition when it leaves our shipping department. In the case of damage or loss, immediately notify the package carrier.

Returns: For detailed information on Shark Werks' return policy, please refer to the Terms and Conditions set forth on the reverse. To return an item, RMA must first be obtained by calling +1 510-651-0300. A 20% handling and restocking fee will be assessed for each item returned.

Subtotal	$1,202.00
Sales Tax (10.25%)	$72.47
Total	$1,274.47
Payments/Credits	$0.00
Balance Due	$1,274.47

ACCEPTANCE OF THIS INVOICE IS AN AGREEMENT NOT TO HOLD SHARK WERKS, INC. AS A COMPANY OR ANY OF ITS EMPLOYEES LIABLE FOR ANY CIRCUMSTANCE OR COSTS THAT MAY ARISE FROM USING ANY OF THESE PRODUCTS.

CUSTOMER #: 504789

182313

PORSCHE

INVOICE

PAGE 1

Porsche Walnut Creek
2555 North Main Street
Walnut Creek, CA 94597

(925) 280-4900
Fax: (925) 280-4912
www.steadporsche.com

SERVICE ADVISOR: 841 JOHN KIM

COLOR	YEAR	MAKE/MODEL	VIN	LICENSE	MILEAGE IN / OUT	TAG
BLACK	06	PORSCHE 997S COUPE	WP0AB29976S740377	CANUFLY	20108/20111	T031

DEL. DATE	PROD. DATE	WARR. EXP.	PROMISED	PO NO.	RATE	PAYMENT	INV. DATE
23AUG05 DD	14JUL05	23AUG2009	17:00 22MAR22		0.00	CASH	31MAR22

R.O. OPENED	READY	OPTIONS:
09:56 14MAR22	14:33 31MAR22	ENG:68600946

```
LINE OPCODE TECH TYPE HOURS                                   LIST      NET     TOTAL
A CLIENT STATES WHEN STARTING VEHICLE WARMED UP, VEHICLE STRUGGLES TO
        START, CHECK AND ADVISE
CAUSE: * GENERAL SERVICING
     00 * GENERAL SERVICING
            786    CP                                                 2070.00  2070.00
        1 997-607-019-03 AS CABLE LOOM                        175.65   175.65   175.65
        2 997-572-867-01-02A LOCKING BOLT                      16.17    16.17    32.34
        1 996-604-103-AX STARTER                             1078.17  1078.17  1078.17
,,,,20111 VERIFIED CUSTOMER COMPLAINT VEHICLE STRUGGLES TO START, CHECK
,,,,BATTERY VOLTAGE, OK AT 12.74V, REC. STARTER CABLE DUE TO POSSIBLY
,,,,FAULTY CABLE, R&R AIR BOX, THROTTLE BODY, INTAKE PIPE AND ALTERNATOR,
,,,,REPLACED STARTER CABLE ALONG WITH NEW STARTER, PERFORMED ROAD TEST,
,,,,VERIFIED VEHICLE NOW STARTS NORMALLY.
            ******************************************************
B CLIENT REQUESTS TO HAVE MISSING TABS IN FRONT TRUNK REPLACED
CAUSE: * GENERAL SERVICING
     00 * GENERAL SERVICING
            786    CP                                                    0.00     0.00
,,,,20111 INSTALL MISSING BATTERY COVER LOCKING TAB.
            ******************************************************
C CHECK AND SET TIRE PRESSURES, TORQUE WHEELS AND MEASURE TIRES
     TP CHECK AND SET TIRE PRESSURES, TORQUE WHEELS
          AND MEASURE TIRES
            786    CP                                                    0.00     0.00
,,,,20108 SET TIRE PRESSURES TO FACTORY SPECS 37/44 PSI FRONT & REAR,
,,,,TORQUE WHEEL LUGS AND MEASURED TIRES.
            ******************************************************
D** CUSTOMER STATES VEHICLE RATTLE COMING FROM LEFT CORNER OF THE DASH
CAUSE: * GENERAL SERVICING
     00 * GENERAL SERVICING
            786    CP                                                    0.00     0.00
,,,,20108 1.00 VERIFIED CUSTOMER COMPLAINT RATTLE ON THE LEFT SIDE OF
,,,,THE DASH, FOUND A-PILLAR RATTLING, REMOVED A-PILLAR TRIM, FOUND BOTTOM
,,,,METAL TAB BENT, STRAIGHTEN METAL TAB AND REINSTALL TRIM, VERIFIED NOISE
```

Original Estimate $

Please read the important information on the reverse side invoice!

I acknowledge receipt of this invoice.

☐ I acknowledge the warranty repairs performed.

☐ I acknowledge notice and oral approval of additional warranty repairs discovered and corrected during this repair visit.

Signature X _____

I acknowledge notice and oral approval of an increase in the original estimate price.

Initials X _____

PORSCHE WALNUT CREEK

2555 NORTH MAIN STREET
WALNUT CREEK, CA 94597
(925) 280-4900

BAR# ARD-196618 EPA# CAL000302147

DESCRIPTION	TOTALS
LABOR AMOUNT	
PARTS AMOUNT	
GAS, OIL, LUBE	
SUBLET AMOUNT	
MISC. CHARGES	
TOTAL CHARGES	
LESS INS/ADJ.	
SALES TAX	
PLEASE PAY THIS AMOUNT	

MAR 31 2022 BY

Copyright 2014 CDK Global, LLC SERVICE INVOICE TYPE 2 - SI2C - IMAGING

CUSTOMER COPY

CUSTOMER #: 504789

182313

PORSCHE

INVOICE

Porsche Walnut Creek
2555 North Main Street
Walnut Creek, CA 94597

(925) 280-4900
Fax: (925) 280-4912
www.steadporsche.com

SERVICE ADVISOR: 841 JOHN KIM

COLOR	YEAR	MAKE/MODEL	VIN	LICENSE	MILEAGE IN / OUT	TAG
BLACK	06	PORSCHE 997S COUPE	WP0AB29976S740377	CANUFLY	20108/20111	T031

DEL. DATE	PROD. DATE	WARR. EXP.	PROMISED	PO NO.	RATE	PAYMENT	INV. DATE
23AUG05 DD	14JUL05	23AUG2009	17:00 22MAR22		0.00	CASH	31MAR22

R.O. OPENED	READY	OPTIONS:
09:56 14MAR22	14:33 31MAR22	ENG:68600946

LINE	OPCODE	TECH	TYPE	HOURS	LIST	NET	TOTAL
,,,,NO LONGER PRESENT.							

****

BAR# AK196618 EPA# 000102813

Original Estimate $

Please read the important information on the reverse side invoice!

I acknowledge receipt of this invoice.

☐ I acknowledge the warranty repairs performed.

☐ I acknowledge notice and oral approval of additional warranty repairs discovered and corrected during this repair visit.

Signature X _____

I acknowledge notice and oral approval of an increase in the original estimate price.

Initials X _____

PORSCHE WALNUT CREEK

2555 NORTH MAIN STREET
WALNUT CREEK, CA 94597
(925) 280-4900

BAR# ARD-196618 EPA# CAL000302147

DESCRIPTION	TOTALS
LABOR AMOUNT	2070.00
PARTS AMOUNT	1286.16
GAS, OIL, LUBE	0.00
SUBLET AMOUNT	0.00
MISC. CHARGES	0.00
TOTAL CHARGES	3356.16
LESS INS/ADJ.	0.00
SALES TAX	112.54
PLEASE PAY THIS AMOUNT	3468.70

Copyright 2014 CDK Global, LLC SERVICE INVOICE TYPE 2 - SI2C - IMAGING

CUSTOMER COPY

CUSTOMER #: 504789

186333

PORSCHE

INVOICE

DUPLICATE 3
PAGE 1

Porsche Walnut Creek
2555 North Main Street
Walnut Creek, CA 94597

(925) 280-4900
Fax: (925) 280-4912
www.steadporsche.com

SERVICE ADVISOR: 841 JOHN KIM

COLOR	YEAR	MAKE/MODEL	VIN	LICENSE	MILEAGE IN / OUT	TAG
BLACK	06	PORSCHE 997S COUPE	WP0AB29976S740377	CANUFLY	21916/21920	T618

DEL. DATE	PROD. DATE	WARR. EXP.	PROMISED	PO NO.	RATE	PAYMENT	INV. DATE
23AUG05 DD	14JUL05	23AUG2009	17:00 28OCT22		0.00	CASH	28OCT22

R.O. OPENED	READY	OPTIONS:
07:36 25OCT22	09:40 28OCT22	ENG:68600946

```
LINE OPCODE TECH TYPE HOURS                                    LIST      NET     TOTAL
A CLIENT STATES THE CHECK ENGINE LIGHT IS ON, CHECK AND ADVISE
CAUSE: * GENERAL SERVICING
     00 * GENERAL SERVICING
            934    CP  0.00
                                                                 0.00      0.00
PARTS:      0.00  LABOR:      0.00  OTHER:      0.00  TOTAL LINE A:        0.00
,,,,21916
,,,,CONFIRMED COSTUMERS COMPLAINT. CHECK ENGINE LIGHT ON DASH. RAN A
,,,,PRE VAL. FOUND FAULTS FOR:
,,,,P0461 - Fuel level sensor(Signal implausible)
,,,,P0455 - Tank system - major leak(exceeds limit value)
,,,,NO HISTORY PERTAINING TO THE CHECK ENGINE LIGHT. VISUALLY INSPECTED
,,,,THE GAS CAP SEAL AND ENGINE BAY VACUUM LINES. NO PROBLEM TO REPORT.
,,,,CLEARED CODES AND ROAD TESTED VEHICLE. NO CODES RETURNED AT THIS TIME.
            ******************************************************
B CLIENT REQUESTS TO HAVE THE SHIFT KNOB BACK TO STOCK, KNOB PROVIDED
        BY GUEST
CAUSE: * GENERAL SERVICING
     00 * GENERAL SERVICING
            934    CP  0.00
                                                                 0.00      0.00
PARTS:      0.00  LABOR:      0.00  OTHER:      0.00  TOTAL LINE B:        0.00
,,,,21916 REMOVED AND REPLACED CUSTOM SHIFT KNOB FOR FACTORY SHIFT KNOB
,,,,THAT WAS SUPPLIED BY CUSTOMER.
            ******************************************************
C CLIENT STATES THE TRIM PIECE ON THE TRANSMISSION HUMP IN THE BACK IS
        BROKE, CHECK AND ADVISE
CAUSE: * GENERAL SERVICING
     00 * GENERAL SERVICING
            934    CP  1.00
                                                               300.00    300.00
        1 997-522-615-01 SHAFT                                  36.88     36.88     36.88
        1 996-522-431-02-01C COVER BLACK                         9.58      9.58      9.58
PARTS:     46.46  LABOR:    300.00  OTHER:      0.00  TOTAL LINE C:       346.46
,,,,21916 FOUND BROKEN RETAINING SHAFT AND BROKEN TRIM COVER PIECE FOR
,,,,REAR SEAT BACK RESTS. REMOVED AND REPLACED SHAFT AND COVER PIECE.
            ******************************************************
```

Original Estimate $

Please read the important information on the reverse side invoice!

I acknowledge receipt of this invoice.

☐ I acknowledge the warranty repairs performed.

☐ I acknowledge notice and oral approval of additional warranty repairs discovered and corrected during this repair visit.

Signature X _____

I acknowledge notice and oral approval of an increase in the original estimate price.

Initials X _____

PORSCHE WALNUT CREEK

2555 NORTH MAIN STREET
WALNUT CREEK, CA 94597
(925) 280-4900

BAR# ARD-196618 EPA# CAL000302147

DESCRIPTION	TOTALS
LABOR AMOUNT	
PARTS AMOUNT	
GAS, OIL, LUBE	
SUBLET AMOUNT	
MISC. CHARGES	
TOTAL CHARGES	
LESS INS/ADJ	
SALES TAX	
PLEASE PAY THIS AMOUNT	

PAID OCT 28 2022

Copyright 2014 CDK Global, LLC SERVICE INVOICE TYPE 2 - SI2C - IMAGING

CUSTOMER COPY

CUSTOMER #: 504789

186333

PORSCHE

INVOICE

DUPLICATE 3
PAGE 2

Porsche Walnut Creek
2555 North Main Street
Walnut Creek, CA 94597

(925) 280-4900
Fax: (925) 280-4912
www.steadporsche.com

SERVICE ADVISOR: 841 JOHN KIM

COLOR	YEAR	MAKE/MODEL	VIN	LICENSE	MILEAGE IN / OUT	TAG
BLACK	06	PORSCHE 997S COUPE	WP0AB29976S740377	CANUFLY	21916/21920	T618

DEL. DATE	PROD. DATE	WARR. EXP.	PROMISED	PO NO.	RATE	PAYMENT	INV. DATE
23AUG05 DD	14JUL05	23AUG2009	17:00 28OCT22		0.00	CASH	28OCT22

R.O. OPENED	READY	OPTIONS:
07:36 25OCT22	09:40 28OCT22	ENG:68600946

```
LINE OPCODE TECH TYPE HOURS                                    LIST      NET     TOTAL
D PERFORM YEARLY SERVICE PER PORSCHE SCHEDULE
CAUSE: SCHEDULED MAINTENANCE
     YS PERFORM YEARLY SERVICE PER PORSCHE SCHEDULE
            934    CP  1.50
        1 900-123-106-30 SEALING RING                                  318.72   318.72
        1 900-219-009-30 SCREW PLUG                          2.01       2.01     2.01
        9 SAE-0W40 MOBIL 1 0W40                             14.80      14.80    14.80
        1 NPN-BCB CLEANER                                   12.77      12.77   114.93
        1 996-107-225-53 FILTER ELEMENT                     10.00      10.00    10.00
PARTS:     171.28  LABOR:     318.72  OTHER:       0.00   29.54      29.54    29.54
,,,,21916 PERFORMED YEARLY SERVICE PER PORSCHE SCHEDULE, DRAINED ENGINE  TOTAL LINE D:   490.00
,,,,OIL AND REPLACED OIL & FILTER. TOPPED UP FLUIDS AND FUNCTION CHECKED
,,,,ALL EXTERIOR LIGHTS. VISUALLY INSPECT SUSPENSIONS AND UNDER BODY PARTS.
,,,,FRONT BRAKES ARE AT 8MM AND REARS ARE AT 8MM PAD THICKNESS REMAINING.
,,,,FRONT TIRES ARE AT 7MM AND REAR TIRES ARE AT 5MM TREAD REMAINING. REAR.
,,,,RESET SERVICE INDICTOR AND CLEAR ALL NONE ACTIVE FAULTS. NO VISIBLE
,,,,FLUID LEAKS FOUND AT THAT TIME. NEXT SERVICE DUE @ 31916 OR IN 12
,,,,MONTHS.
            ******************************************************
E CHECK AND SET TIRE PRESSURES, TORQUE WHEELS AND MEASURE TIRES
     TP CHECK AND SET TIRE PRESSURES, TORQUE WHEELS
        AND MEASURE TIRES
            934    CP  0.00                                                0.00     0.00
PARTS:       0.00  LABOR:       0.00  OTHER:       0.00  TOTAL LINE E:                0.00
,,,,21916 ADJUSTED TIRE PRESSURE AND TORQUED WHEELS TO THE MANUFACTURE
,,,,SPEC.
            ******************************************************
F** CLIENT AUTHORIZES TO HAVE THE BATTERY REPLACED PER RECOMMENDATION
     BATT PERFORM BATTERY REPLACEMENT
            934    CP  0.50                                               150.00   150.00
        1 MTP-H7 BATTERY                                           247.10  247.10   247.10
PARTS:     247.10  LABOR:     150.00  OTHER:       0.00  TOTAL LINE F:                397.10
,,,,21918 REMOVED AND REPLACED BATTERY WITH THE PROPER SIZE BATTERY
,,,,THAT THE CAR IS DESIGNED FOR(H7 OPPOSE TO THE H6 THAT WAS THERE PRIOR).
```

Original Estimate $

Please read the important information on the reverse side invoice!

I acknowledge receipt of this invoice.

☐ I acknowledge the warranty repairs performed.

☐ I acknowledge notice and oral approval of additional warranty repairs discovered and corrected during this repair visit.

Signature X _____

I acknowledge notice and oral approval of an increase in the original estimate price.

Initials X _____

PORSCHE WALNUT CREEK

2555 NORTH MAIN STREET
WALNUT CREEK, CA 94597
(925) 280-4900

BAR# ARD-196618 EPA# CAL000302147

DESCRIPTION	TOTALS
LABOR AMOUNT	
PARTS AMOUNT	
GAS, OIL, LUBE	
SUBLET AMOUNT	
MISC. CHARGES	
TOTAL CHARGES	
LESS INS/ADJ.	
SALES TAX	
PLEASE PAY THIS AMOUNT	

Copyright 2014 CDK Global, LLC SERVICE INVOICE TYPE 2 - SI2C - IMAGING

CUSTOMER COPY

CUSTOMER #: 504789

186333

PORSCHE

INVOICE

DUPLICATE 3
PAGE 3

Porsche Walnut Creek
2555 North Main Street
Walnut Creek, CA 94597

(925) 280-4900
Fax: (925) 280-4912
www.steadporsche.com

SERVICE ADVISOR: 841 JOHN KIM

COLOR	YEAR	MAKE/MODEL	VIN	LICENSE	MILEAGE IN / OUT	TAG
BLACK	06	PORSCHE 997S COUPE	WP0AB29976S740377	CANUFLY	21916/21920	T618

DEL. DATE	PROD. DATE	WARR. EXP.	PROMISED	PO NO.	RATE	PAYMENT	INV. DATE
23AUG05 DD	14JUL05	23AUG2009	17:00 28OCT22		0.00	CASH	28OCT22

R.O. OPENED	READY	OPTIONS:
07:36 25OCT22	09:40 28OCT22	ENG:68600946

LINE OPCODE TECH TYPE HOURS LIST NET TOTAL

,,,,ALSO RELOCATED AFTER MARKET STEREO AMP INLINE FUSE HOLDER TO THE SIDE
,,,,OF THE BATTERY WITH SOME ADHESIVE HOOK AND LOOP VELCRO STRIPS(WAS
,,,,MOUNTED ON BATTERY TRAY WITH SELF TAPPING SCREWS PRIOR, COVERING THE
,,,,REQUIRED THREADED HOLE FOR THE BATTERY HOLD DOWN BRACKET WITH NEW
,,,,PROPER SIZE BATTERY INSTALLED).

****

BAR# AK196618 EPA# 000102813

Original Estimate $

Please read the important information on the reverse side invoice!

I acknowledge receipt of this invoice.

☐ I acknowledge the warranty repairs performed.

☐ I acknowledge notice and oral approval of additional warranty repairs discovered and corrected during this repair visit.

Signature X _____

I acknowledge notice and oral approval of an increase in the original estimate price.

Initials X _____

PORSCHE WALNUT CREEK

2555 NORTH MAIN STREET
WALNUT CREEK, CA 94597
(925) 280-4900

BAR# ARD-196618 EPA# CAL000302147

DESCRIPTION	TOTALS
LABOR AMOUNT	768.72
PARTS AMOUNT	464.84
GAS, OIL, LUBE	0.00
SUBLET AMOUNT	0.00
MISC. CHARGES	0.00
TOTAL CHARGES	1233.56
LESS INS/ADJ.	0.00
SALES TAX	40.67
PLEASE PAY THIS AMOUNT	1274.23

Copyright 2014 CDK Global, LLC SERVICE INVOICE TYPE 2 - SI2C - IMAGING

CUSTOMER COPY

CUSTOMER #: 47766

105990

PORSCHE®

INVOICE

Porsche Palm Springs

3735 E Palm Canyon Drive · Palm Springs, California 92264
Telephone: (760) 808-8200 · Fax: (760) 808-8292
www.porschepalmsprings.com

PAGE 1

SERVICE ADVISOR: 57 Danielle Brian

COLOR	YEAR	MAKE/MODEL	VIN	LICENSE	MILEAGE IN / OUT	TAG
BLACK	06	PORSCHE 911 GT3	WP0AB29976S740377		23805/23805	T1560

DEL. DATE	PROD. DATE	WARR. EXP.	PROMISED	PO NO.	RATE	PAYMENT	INV. DATE
23AUG05 DD	14JUL05	23AUG2009	15:00 21NOV23		255.00	CASH	21NOV23

R.O. OPENED	READY	OPTIONS:
17:37 20NOV23	15:34 21NOV23	ENG:3.8_Liter

```
LINE OPCODE TECH TYPE HOURS                                   LIST      NET     TOTAL
A MOUNT & BALANCE 2 PORSCHE APPROVED TIRES----M9103
     2T MOUNT & BALANCE 2 PORSCHE APPROVED TIRES
        600166   CP  1.50                                                 150.00   150.00
        2 1737800 295/30/19 PZERO N2                                358.79 358.79   717.58
        2 CTT CAL. TIRE TAX                                           1.75   1.75     3.50
        2 TD TIRE DISPOSAL FEE                                        2.00   2.00     4.00
        4 WW WHEEL WEIGHT                                             2.95   2.95    11.80
 23805 1.50
 Mount a balanced 2 Porsche approved tires on the rear wheels.
 DOT right rear XT R1 J378 3722
 DOT Left rear XT R1 J378 3722
          ******************************************************
B CUSTOMER HAS DECLINED THE MULTIPLE POINT INSPECTION ON THIS VISIT.
CAUSE:
     NOMPI CUSTOMER HAS DECLINED THE MULTIPLE POINT
           INSPECTION ON THIS VISIT.
           600166  IPS  0.00                                                                (N/C)
          ******************************************************
C PERFORM COURTESY WASH & VACUUM UPON CUSTOMER REQUEST.
     WASH PERFORM COURTESY WASH & VACUUM UPON CUSTOMER
           REQUEST.
           600166  IPS  0.00                                                                (N/C)
          ******************************************************
*********************************************************************
ESTIMATE: 1,700.00          20NOV23 17:37  SA: 57
  CONTACT:
*********************************************************************
```

Original Estimate (Parts & Labor)	Total Additional Cost Authorized	Approved By:	Date & Time	Authorization Obtained By:
$	$			☐ In Person Approval ☐ Telephone ☐ Text ☐ Email/Fax (See Attached)
Revised Estimate $	$			☐ In Person Approval ☐ Telephone ☐ Text ☐ Email/Fax (See Attached)

☐ Tire pressure check/inflation service was performed.
RF_____psi LF_____psi RR_____psi LR_____psi
☐ Customer declined tire pressure check/inflation service. Initials

By signing below, you acknowledge that you were notified of and authorized the Dealership to perform the services/repairs itemized in this Invoice and that you received (or had the opportunity to inspect) any replaced parts as requested by you.

DATE CUSTOMER SIGNATURE AUTHORIZED DEALERSHIP REPRESENTATIVE SIGNATURE

*HAZARDOUS WASTE DISPOSAL COSTS: We have added this charge to cover costs associated with the handling, management and disposal of toxic wastes or hazardous substances under California and Federal Law.

ALL PARTS ARE NEW UNLESS OTHERWISE INDICATED.
☐ Some Parts Not Returnable

DESCRIPTION	TOTALS
LABOR AMOUNT	150.00
PARTS AMOUNT	729.38
GAS, OIL, LUBE	0.00
SUBLET AMOUNT	0.00
WASTE DISPOSAL COSTS *	7.50
TOTAL CHARGES	886.88
LESS INSURANCE	0.00
SALES TAX	67.47
PLEASE PAY THIS AMOUNT	954.35

NOTICE TO CONSUMER: PLEASE READ IMPORTANT INFORMATION ON BACK.

DealerCAP 2014 CDK Global, LLC 101/151 SERVICE INVOICE TYPE 2 - SI2C - "LIMITED WARRANTY" - CALIFORNIA - 3698022

CUSTOMER COPY

B.A.R. REG.# ARD 296230

EPA# CAL000448459

CUSTOMER #: 47766

105689

PORSCHE

INVOICE

Porsche Palm Springs

3735 E Palm Canyon Drive · Palm Springs, California 92264
Telephone: (760) 808-8200 · Fax: (760) 808-8292
www.porschepalmsprings.com

SERVICE ADVISOR: 57 Danielle Brian

COLOR	YEAR	MAKE/MODEL	VIN	LICENSE	MILEAGE IN / OUT	TAG
BLACK	06	PORSCHE 911 GT3	WP0AB29976S740377		23713/23713	T1254

DEL. DATE	PROD. DATE	WARR. EXP.	PROMISED	PO NO.	RATE	PAYMENT	INV. DATE
23AUG05 DD	14JUL05	23AUG2009	16:30 01NOV23		255.00	CASH	02NOV23

R.O. OPENED	READY	OPTIONS:
11:03 01NOV23	16:14 02NOV23	ENG:3.8_Liter

LINE OPCODE TECH TYPE HOURS	LIST	NET	TOTAL
A OIL & FILTER CHANGE - PORSCHE			
LOFP OIL & FILTER CHANGE - PORSCHE			
600166 CP 1.50		250.00	250.00
1 900-219-009-30 SCREW PLUG	25.52	25.52	25.52
1 900-123-106-30 SEALING RING	6.03	6.03	6.03
9 0W40 MOBIL 1 0W40 110539	11.10	11.10	99.90
1 18909 BRAKE CLEANER	5.95	5.95	5.95
1 1348 OIL FILTER	17.76	17.76	17.76
23713 1.50			
Vehicle has an aftermarket oil filter. Oil filter will need to be provided to performed the oil filter change.			
Performed oil and filter change according to porsche specification.			
**********			
B PORSCHE PALM SPRINGS COMPLEMENTARY MULTI-POINT INSPECTION			
PMPI PORSCHE PALM SPRINGS COMPLEMENTARY MULTI-POINT INSPECTION			
600166 IPS 0.00			
23713			(N/C)
Performed multi-point inspection			
Tires front 6mm rear 2mm			
Brakes front 8mm rear 9mm			
**********			
C CHECK AND RECORD TIRE PRESSURES PER CALIFORNIA STATE LAW, ADJUST AS NEEDED			
TIREC COMPLETED TIRE PRESSURE CHECK			
600166 IPS 0.00			
23713			(N/C)
Front 36psi			
Rear 42psi			
**********			
D PERFORM COURTESY WASH & VACUUM UPON CUSTOMER REQUEST.			
WASH PERFORM COURTESY WASH & VACUUM UPON CUSTOMER REQUEST.			
600166 IPS 0.00			
			(N/C)

Original Estimate (Parts & Labor)	Total Additional Cost Authorized	Approved By:	Date & Time	Authorization Obtained By:
$	$			☐ In Person Approval ☐ Telephone ☐ Text ☐ Email/Fax (See Attached)
Revised Estimate $	$			☐ In Person Approval ☐ Telephone ☐ Text ☐ Email/Fax (See Attached)

☐ Tire pressure check/inflation service was performed.
☐ RF_____psi LF_____psi RR_____psi LR_____psi
Customer declined tire pressure check/inflation service. _____ Initials

By signing below, you acknowledge that you were notified of and authorized the Dealership to perform the services/repairs itemized in this Invoice and that you received (or had the opportunity to inspect) any replaced parts as requested by you.

DATE CUSTOMER SIGNATURE AUTHORIZED DEALERSHIP REPRESENTATIVE SIGNATURE

*HAZARDOUS WASTE DISPOSAL COSTS: We have added this charge to cover costs associated with the handling, management and disposal of toxic wastes or hazardous substances under California and Federal Law.

ALL PARTS ARE NEW UNLESS OTHERWISE INDICATED.
☐ Some Parts Not Returnable

DESCRIPTION	TOTALS
LABOR AMOUNT	
PARTS AMOUNT	
GAS, OIL, LUBE	
SUBLET AMOUNT	
WASTE DISPOSAL COSTS *	
TOTAL CHARGES	
LESS INSURANCE	
SALES TAX	
PLEASE PAY THIS AMOUNT	

NOTICE TO CONSUMER: PLEASE READ IMPORTANT INFORMATION ON BACK.

CUSTOMER #: 47766

105689

PORSCHE®

INVOICE

Porsche Palm Springs

3735 E Palm Canyon Drive · Palm Springs, Calfornia 92264
Telephone: (760) 808-8200 · Fax: (760) 808-8292
www.porschepalmsprings.com

SERVICE ADVISOR: 57 Danielle Brian

COLOR	YEAR	MAKE/MODEL	VIN	LICENSE	MILEAGE IN / OUT	TAG
BLACK	06	PORSCHE 911 GT3	WP0AB29976S740377		23713/23713	T1254

DEL. DATE	PROD. DATE	WARR. EXP.	PROMISED	PO NO.	RATE	PAYMENT	INV. DATE
23AUG05 DD	14JUL05	23AUG2009	16:30 01NOV23		255.00	CASH	02NOV23

R.O. OPENED	READY	OPTIONS:
11:03 01NOV23	16:14 02NOV23	ENG:3.8_Liter

LINE	OPCODE	TECH	TYPE	HOURS	LIST	NET	TOTAL
E	NO OPEN RECALLS OR WORKSHOP CAMPAIGNS AT THIS TIME						
	NOOPEN NO OPEN RECALLS OR WORKSHOP CAMPAIGNS AT THIS TIME						
	600166	IPS		0.00			(N/C)

****

****

ESTIMATE: 480.00 01NOV23 11:03 SA: 57
CONTACT:

****

Original Estimate (Parts & Labor)	Total Additional Cost Authorized	Approved By:	Date & Time	Authorization Obtained By:
$	$			☐ In Person Approval ☐ Telephone ☐ Text ☐ Email/Fax (See Attached)
Revised Estimate $	$			☐ In Person Approval ☐ Telephone ☐ Text ☐ Email/Fax (See Attached)

☐ Tire pressure check/inflation service was performed.
☐ RF_____psi LF_____psi RR_____psi LR_____psi
Customer declined tire pressure check/inflation service. _____ Initials

By signing below, you acknowledge that you were notified of and authorized the Dealership to perform the services/repairs itemized in this Invoice and that you received (or had the opportunity to inspect) any replaced parts as requested by you.

DATE CUSTOMER SIGNATURE AUTHORIZED DEALERSHIP REPRESENTATIVE SIGNATURE

***HAZARDOUS WASTE DISPOSAL COSTS:** We have added this charge to cover costs associated with the handling, management and disposal of toxic wastes or hazardous substances under California and Federal Law.

ALL PARTS ARE NEW UNLESS OTHERWISE INDICATED.
☐ **Some Parts Not Returnable**

DESCRIPTION	TOTALS
LABOR AMOUNT	250.00
PARTS AMOUNT	155.16
GAS, OIL, LUBE	0.00
SUBLET AMOUNT	0.00
WASTE DISPOSAL COSTS *	0.00
TOTAL CHARGES	405.16
LESS INSURANCE	0.00
SALES TAX	14.35
PLEASE PAY THIS AMOUNT	419.51

NOTICE TO CONSUMER: PLEASE READ IMPORTANT INFORMATION ON BACK.

DealerCAP 2014 CDK Global, LLC 101/15 SERVICE INVOICE TYPE 2 - S12C - "LIMITED WARRANTY" - CALIFORNIA - 0696022

CUSTOMER COPY

B.A.R. REG.# ARD 296230

EPA# CAL000448459

LOT LOCATION:
CUSTOMER #: 504789

PAID

211682

INVOICE

PAGE 1

PORSCHE

Porsche Walnut Creek
A FLETCHER JONES COMPANY

2555 N. Main Street
Walnut Creek, CA 94597
Main#: (925) 504-4900
Monday - Friday 8am - 6pm
Saturday 9am - 3pm

B.A.R. REG# ARD 305803 EPA# CAL

SERVICE ADVISOR: 740841 JOHN KIM

COLOR	YEAR	MAKE/MODEL	VIN	LICENSE	MILEAGE IN / OUT	TAG
BLACK	06	PORSCHE 997S COUPE	WP0AB29976S740377	CANUFLY	25730/25732	T195

DEL. DATE	PROD. DATE	WARR. EXP.	PROMISED	PO NO.	RATE	PAYMENT	INV. DATE
23AUG05 IS 23AUG05 DD	14JUL05	23AUG2009	17:00 16JAN25		0.00	CASH	21JAN25

R.O. OPENED	READY	OPTIONS:
16JAN25	21JAN25	ENG:68600946

LINE OPCODE TECH TYPE HOURS LIST NET TOTAL

A CLIENT STATES THE AIRBAG LIGHT IS ON, CHECK AND ADVISE
WCPLABOR Customer repair labor / inspection for
customer complaint line
740913 CP

PARTS: 0.00 LABOR: 0.00 OTHER: 0.00 TOTAL LINE A: 0.00 0.00 0.00

25730 CONFIRMED CLIENTS CONCERN. PERFORMED PRE VAL, SCANNED VEHICLE FOR FAULTS. ACTIVE FAULT POSIP 8016 Passenger Airbag OFF light, open circuit/short circuit to ground STORED AT THIS TIME. ADJUSTED PASSENGER SIDE SEAT & INSPECTED HARNESS. WHILE ADJUSTING SEAT PREVIOUSLY ACTIVE FAULT VENT PASSIVE. CLEARED FAULT MEMORY. PERFORMED ROAD TEST. ADJUSTED PASSENGER SEAT BACK TO ORIGINAL ORIENTATION AT TIME OF VISIT. FAULT DID NOT RETURN.

****

B PERFORM FULL SERVICE TO PORSCHE SPEC
WCP20K SERVICE
740913 CP

1	900-123-106-30 SEALING RING		1950.00	1950.00
1	900-219-009-30 SCREW PLUG	3.73	3.73	3.73
9	SAE-0W40 MOBIL 1 0W40	18.42	18.42	18.42
1	997-571-219-02 DUST AND POLLEN FILTER	12.77	12.77	114.93
6	999-170-223-90 SPARK PLUG	138.55	138.55	138.55
1	996-628-901-11 1 SET: WIPER BLADES	33.81	33.81	202.86
1	996-110-131-52 AIR CLEANER CARTRIDGE	85.14	85.14	85.14
1	1348 OIL FILTER	68.18	68.18	68.18
		28.06	28.06	28.06

PARTS: 659.87 LABOR: 1950.00 OTHER: 0.00 TOTAL LINE B: 2609.87

25730 CLIENT REQUEST MAJOR SERVICE. DRAINED AND REFILLED ENGINE OIL WITH MOBIL 1 0W-40 FULL SYNTHETIC OIL AND REPLACED FILTER, OIL FILTER SEAL, DRAIN PLUG SEAL. REPLACE POLLEN FILTER, AIR FILTER AND SPARK PLUGS. PERFORMED BRAKE FLUID FLUSH. CLEAN OUT AIR INTAKES AND WATER DRAINS. INSPECT POSSIBLE FAULT CODES IN CONTROL UNITS (NONE AT THIS TIME), RE-SECURED UNDER-BODY PANELS, ADJUST FLUID LEVELS TO FACTORY LEVELS, ADJUST TIRE AIR PRESSURES TO FACTORY SETTINGS, PERFORM VISUAL INSPECTION OF FRONT AND REAR SUSPENSION COMPONENTS (ALL OKAY), FRONT BRAKE PADS AT 8MM REMAINING, REAR BRAKE PADS AT 8MM REMAINING. FRONT

Original Estimate (Parts & Labor)	Total Additional Cost Authorized	Approved By:	Date & Time	Authorization Obtained By:
$	$			☐ In Person Approval ☐ Telephone ☐ Text ☐ Email/Fax (See Attached)
Revised Estimate $	$			☐ In Person Approval ☐ Telephone ☐ Text ☐ Email/Fax (See Attached)

☐ Tire pressure check/inflation service was performed.
RF_____psi LF_____psi RR_____psi LR_____psi
☐ Customer declined tire pressure check/inflation service. Initials

By signing below, you acknowledge that you were notified of and authorized the Dealership to perform the services/repairs itemized in this Invoice and that you received (or had the opportunity to inspect) any replaced parts as requested by you.

DATE CUSTOMER SIGNATURE AUTHORIZED DEALERSHIP REPRESENTATIVE SIGNATURE

*HAZARDOUS WASTE DISPOSAL COSTS: We have added this charge to cover costs associated with the handling, management and disposal of toxic wastes or hazardous substances under California and Federal Law.

ALL PARTS ARE NEW UNLESS OTHERWISE INDICATED.
☐ Some Parts Not Returnable

DESCRIPTION	TOTALS
LABOR AMOUNT	
PARTS AMOUNT	
GAS, OIL, LUBE	
SUBLET AMOUNT	
WASTE DISPOSAL COSTS *	
TOTAL CHARGES	
LESS DISCOUNT	
SALES TAX	
PLEASE PAY THIS AMOUNT	

NOTICE TO CONSUMER: PLEASE READ IMPORTANT INFORMATION ON BACK.

DealerCAP 2014 COX Global, LLC 101/131 SERVICE INVOICE TYPE 2 - SIZE - "LIMITED WARRANTY" - CALIFORNIA - 9/09/07

CUSTOMER COPY

LOT LOCATION:
CUSTOMER #: 504789

211682

INVOICE

PAGE 2

Porsche Walnut Creek
A FLETCHER JONES COMPANY

2555 N. Main Street
Walnut Creek, CA 94597
Main#: (925) 504-4900
Monday - Friday 8am - 6pm
Saturday 9am - 3pm

B.A.R. REG# ARD 305803 EPA# CAL

SERVICE ADVISOR: 740841 JOHN KIM

COLOR	YEAR	MAKE/MODEL	VIN	LICENSE	MILEAGE IN / OUT	TAG
BLACK	06	PORSCHE 997S COUPE	WP0AB29976S740377	CANUFLY	25730/25732	T195

DEL. DATE	PROD. DATE	WARR. EXP.	PROMISED	PO NO.	RATE	PAYMENT	INV. DATE
23AUG05 IS 23AUG05 DD	14JUL05	23AUG2009	17:00 16JAN25		0.00	CASH	21JAN25

R.O. OPENED	READY	OPTIONS:
16JAN25	21JAN25	ENG:68600946

LINE OPCODE TECH TYPE HOURS LIST NET TOTAL

LEFT TIRE HAS 4MM OF TREAD REMAINING, FRONT RIGHT TIRE HAS 4MM OF TREAD REMAINING. REAR LEFT TIRE HAS 5MM OF TREAD REMAINING. REAR RIGHT TIRE HAS 5MM OF TREAD REMAINING. PERFORM INSPECTION OF ENGINE COMPARTMENT AREA INCLUDING BELTS, HOSE, SEALS AND GASKETS (NO LEAKS AT THIS TIME). FUNCTION CHECK INTERIOR CABIN LIGHTS, EXTERIOR LIGHTING (ALL FUNCTIONING AS DESIGNED). RESET SERVICE INDICATOR. ROAD TEST. NEXT SERVICE DUE @ 35730 OR IN 12 MONTHS.

****

C PERFORM MULTI POINT INSPECTION
CAUSE: PERFORM MULTI POINT INSPECTION
MPI PERFORM MULTI POINT INSPECTION
740913 IMPI
PARTS: 0.00 LABOR: 0.00 OTHER: 0.00 TOTAL LINE C: (N/C) 0.00
25730 SEE LINE B.

****

D CHECK TIRES PRESSURES, SET TIRE PRESSURES, FRONT____psi, REAR____psi
40POZ-TP CHECK TIRES PRESSURES, SET TIRE PRESSURES, FRONT____psi, REAR____psi
740913 CP
PARTS: 0.00 LABOR: 0.00 OTHER: 0.00 TOTAL LINE D: 0.00 0.00
25730 SET TIRE PRESSURES. SET FRONT TIRES TO 34PSI, SET REAR TIRES TO 40PSI.

****

****
ESTIMATE: 2,395.00 16JAN25 08:39 SA: 740841
CONTACT:
****

Original Estimate (Parts & Labor)	Total Additional Cost Authorized	Approved By:	Date & Time	Authorization Obtained By:
$	$			☐ In Person Approval ☐ Telephone ☐ Text ☐ Email/Fax (See Attached)
Revised Estimate $	$			☐ In Person Approval ☐ Telephone ☐ Text ☐ Email/Fax (See Attached)

☐ Tire pressure check/inflation service was performed.
RF_____psi LF_____psi RR_____psi LR_____psi
☐ Customer declined tire pressure check/inflation service. _____ Initials

By signing below, you acknowledge that you were notified of and authorized the Dealership to perform the services/repairs itemized in this Invoice and that you received (or had the opportunity to inspect) any replaced parts as requested by you.

DATE CUSTOMER SIGNATURE AUTHORIZED DEALERSHIP REPRESENTATIVE SIGNATURE

*HAZARDOUS WASTE DISPOSAL COSTS: We have added this charge to cover costs associated with the handling, management and disposal of toxic wastes or hazardous substances under California and Federal Law.

ALL PARTS ARE NEW UNLESS OTHERWISE INDICATED.
☐ Some Parts Not Returnable

DESCRIPTION	TOTALS
LABOR AMOUNT	1950.00
PARTS AMOUNT	659.87
GAS, OIL, LUBE	0.00
SUBLET AMOUNT	0.00
WASTE DISPOSAL COSTS *	0.00
TOTAL CHARGES	2609.87
LESS DISCOUNT	0.00
SALES TAX	61.04
PLEASE PAY THIS AMOUNT	2670.91

NOTICE TO CONSUMER: PLEASE READ IMPORTANT INFORMATION ON BACK.

DealerCAP 2014 CDK Global, LLC (01/19) SERVICE INVOICE TYPE 2 - S12C - "LIMITED WARRANTY" - CALIFORNIA - 9090910

CUSTOMER COPY